Preface

Thank you for purchasing inverter.

This manual describes how to use inverter properly. Please read it carefully before installation, operation, maintenance and inspection. Besides, please use the product after understanding the safety precautions.

Precautions
● In order to describe the product's details, the drawings presented in this instruction are sometimes shown without covers or protective guards. When using the product, please make sure to install the cover or protective guard as specified firstly, and operate the products in accordance with the instructions. ● Since the drawings in this manual are represented examples, some are subject to differ from delivered products. ● This manual may be modified when necessary because of improvement of the product, modification or changes in specifications. Such modifications are denoted by a revised manual No.. ● If you want to order the manual due to loss or damage, please contact our company agents in each region or our company customer service center directly. ● If there is still any problem during using the products, please contact our company customer service center directly.

Contents

Chapter 1 Safety and Precautions 1
1.1 Safety Precautions 1
1.2 Precautions 3
Chapter 2 Product Information 6
2.1 Product Inspection 6
2.2 Model Description 6
2.3 Description of Nameplate 7
2.4 Selection Guide 7
2.5 Technical Specifications 9
2.6 External & Installation Dimensions 11
2.7 Routine Maintenance of Inverter 20
2.8 Instructions on Warranty of Inverter 22
Chapter 3 Mechanical and Electric Installation 23
3.1 Mechanical Installation 23
3.2 Electrical Installation 24
Chapter 4 Operation and Display 36
4.1 Keypad Description 36
4.2 Function Code Checking and Modification Methods Description 38
4.3 Power-on Initialization 38
4.4 Fault Protection 38
4.5 Stand By 39
4.6 Running 39
4.7 Password Setting 39
4.8 Motor Parameters Autotuning 39
Chapter 5 Function Parameter List 41
5.1 Basic Function Parameter Table 42
5.2 Monitoring Parameter Table 68
Chapter 6 Parameter Description 71
Group P0 Basic Function 71
Group P1 Motor Parameters 80
Group P2 Vector Control Parameters 82
Group P3 V/F Control Parameters 85
Group P4 Input Terminal 88
Group P5 Output Terminal 98
Group P6 Start and Stop Control 102

Group P7 Keypad and Display 107
Group P8 Enhanced Function 113
Group P9 Fault and Protection 122
Group PA PID Function 129
Group PB Wobble Frequency, Fixed Length, Counting 135
Group PC Multi-step Command and Simple PLC Function 138
Group PD Communication Parameters 143
Group PP Function Code Management 143
Group A0 Torque Control Parameters 145
Group A9 Special Function 147
Group U0 Monitoring Parameters 151
Chapter 7 EMC (Electromagnetic Compatibility) 158
7.1 Definition 158
7.2 EMC Standard Description 158
7.3 EMC Guide 158
Chapter 8 Trouble Shooting 161
8.1 Fault and Trouble Shooting 161
8.2 Common Faults and Solutions 168
Chapter 9 MODBUS Communication Protocol 169
9.1 About Protocol 169
9.2 Application Method 169
9.3 Bus Structure 169
9.4 Protocol Description 169
9.5 Communication Data Structure 170
9.6 Command Code and Communication Data Description 170
9.7 PD Group Communication Parameter Description 177

Chapter 1 Safety and Precautions

Safety definition:

In this manual, safety precautions are classified as follows:

Danger: Operations which are not performed according to requirements may cause serious equipment loss or personnel injury.

Caution: Operations which are not performed according to requirements may cause medium hurt or light hurt or material loss.

During the installation, commissioning and maintenance of the system, please make sure to follow the safety and precautions of this chapter. In case of a result of illegal operations, caused any harm and losses is nothing to do with the company.

1.1 Safety Precautions

1.1.1 Before Installation:

Danger	● Do not use the water-logged inverter, damaged inverter or inverter with missing parts. Otherwise, there may be risk of injury. ● Use the motor with Class B or above insulation. Otherwise, there may be risk of electric shock.
Caution	● Carefully handled when loading, otherwise it may damage the inverter. ● Please don't use the damaged drive or inverter with missing parts, there may be risk of injury. ● Do not touch the electronic parts and components; otherwise it will cause static electricity.

1.1.2 During Installation:

Danger	● Install the inverter on incombustible surface such as metal, and keep away from flammable substances. Otherwise it may cause fire. ● Do not loose the set screw of the equipment, especially the screws marked in RED.
Caution	● Do not drop the cable residual or screw in the inverter. Otherwise it may damage the inverter. ● Please install the drive in the place where there is no direct sunlight or less vibratory. ● When more than two inverters are to be installed in one cabinet, due attention should be paid to the installation locations (refer to Chapter 3 Mechanical and Electrical Installation) to ensure the heat sinking effect.

1.1.3 During Wiring:

Danger	● Operation should be performed by the professional engineering technician. Otherwise there will be danger of electric shock! ● There should be circuit breaker between the inverter and power supply. Otherwise, there may be fire! ● Make sure the power is disconnected prior to the connection. Otherwise there will be danger of electric shock! ● The ground terminal should be earthed reliably. Otherwise there may be danger of electric shock.
Caution	● Never connect AC power to output UVW terminals. Please note the remark of the wiring terminals, connect them correctly. Otherwise may cause inverter damaged. ● Ensure the wiring circuit can meet the requirement of EMC and the area safety standard. Please follow the instructions in the manual before wiring. Otherwise may cause injury or electric shock. ● Never connect the braking resistor between DC bus (+), (-) terminals. Otherwise may cause fire. ● Encoder must be used together with shielded wire, and ensure the single terminal of the shielded lay is connected with ground well.

1.1.4 Before Power-on:

Danger	● Please confirm whether the power voltage class is consistent with the rated voltage of the inverter and whether the I/O cable connecting positions are correct, and check whether the external circuit is short circuited and whether the connecting line is firm. Otherwise it may damage the inverter. The cover must be well closed prior to the inverter power-on. Otherwise electric shock may be caused. ● The inverter is free from dielectric test because this test is performed prior to the delivery. Otherwise accident may occur.
Caution	● The cover must be well closed prior to the inverter power-on. Otherwise electric shock may be caused! ● Whether all the external fittings are connected correctly in accordance with the circuit provided in this manual. Otherwise accident may occur!

1.1.5 After Power-on:

Danger	● Do not open the cover of the inverter upon power-on. Otherwise there will be danger of electric shock! ● Do not touch the inverter and its surrounding circuit with wet hand. Otherwise there will be danger of electric shock! ● Do not touch the inverter terminals (including control terminal). Otherwise there will be danger of electric shock! ● At power-on, the inverter will perform the security check of the external heavy-current circuit automatically. Thus, at the moment please do not touch the terminals U, V and W, or the terminals of motor, otherwise there will be danger of electric shock.
Cau	● If parameter identification is required, due attention should be paid to the danger of

tion	injury arising from the rotating motor. Otherwise accident may occur! ● Do not change the factory settings at will. Otherwise it may damage the equipment!

1.1.6 During Operation:

Danger	● Do not touch the fan or discharge resistor to sense the temperature. Otherwise, you may get burnt! ● Detection of signals during the operation should only be conducted by qualified technician. Otherwise, personal injury or equipment damage may be caused!
Caution	● During the operation of the inverter, keep items from falling into the equipment. Otherwise, it may damage the equipment! ● Do not start and shut down the inverter by connecting and disconnecting the contactor. Otherwise, it may damage the equipment!

1.1.7 During Maintain:

Danger	● Do not repair and maintain the equipment with power connection. Otherwise there will be danger of electric shock! ● Be sure to conduct repair and maintenance after the charge LED indicator of the inverter is OFF. Otherwise, the residual charge on the capacitor may cause personal injury! ● The inverter should be repaired and maintained only by the qualified person who has received professional training. Otherwise, it may cause personal injury or equipment damage! ● Carry out parameter setting after replacing the inverter, all the plug-ins must be plug and play when power outage.

1.2 Precautions

1.2.1 Motor Insulation Inspection

When the motor is used for the first time, or when the motor is reused after being kept, or when periodical inspection is performed, it should conduct motor insulation inspection so as to avoid damaging the inverter because of the insulation failure of the motor windings. The motor wires must be disconnected from the inverter during the insulation inspection. It is recommended to use the 500V megameter, and the insulating resistance measured should be at least 5MΩ.

1.2.2 Thermal Protection of the Motor

If the ratings of the motor does not match those of the inverter, especially when the rated power of the inverter is higher than the rated power of the motor, the relevant motor protection parameters in the in the inverter should be adjusted, or thermal relay should be mounted to protect the motor.

1.2.3 Running with Frequency higher than Standard Frequency

This inverter can provide output frequency of 0Hz to 3000Hz. If the user needs to run the inverter with frequency of more than 50Hz, please take the resistant pressure of the mechanical devices into consideration.

1.2.4 Vibration of Mechanical Device

The inverter may encounter the mechanical resonance point at certain output frequencies, which can be avoided by setting the skip frequency parameters in the inverter.

1.2.5 Motor Heat and Noise

Since the output voltage of inverter is PWM wave and contains certain harmonics, the temperature rise, noise and vibration of the motor will be higher than those at power frequency.

1.2.6 Voltage-sensitive Device or Capacitor Improving Power Factor at the Output Side

Since the inverter output is PWM wave, if the capacitor for improving the power factor or voltage-sensitive resistor for lightning protection is mounted at the output side, it is easy to cause instantaneous over current in the inverter, which may damage the inverter. It is recommended that such devices not be used.

1.2.7 Switching Devices like Contactors Used at the Input and Output terminal

If a contactor is installed between the power supply and the input terminal of the inverter, it is not allowed to use the contactor to control the startup/stop of the inverter. If such contactor is unavoidable, it should be used with interval of at least one hour. Frequent charge and discharge will reduce the service life of the capacitor inside the inverter. If switching devices like contactor are installed between the output end of the inverter and the motor, it should ensure that the on/off operation is conducted when the inverter has no output. Otherwise the modules in the inverter may be damaged.

1.2.8 Use under voltage rather than rated voltage

If the KE series inverter is used outside the allowable working voltage range as specified in this manual, it is easy to damage the devices in the inverter. When necessary, use the corresponding step-up or step-down instruments to change the voltage.

1.2.9 Change Three-phase Input to Two-phase Input

It is not allowed to change the KE series three-phase inverter into two-phase one. Otherwise, it may cause fault or damage to the inverter.

1.2.10 Lightning Impulse Protection

The series inverter has lightning over current protection device, and has certain self-protection capacity against the lightning. In applications where lightning occurs frequently, the user should install additional protection devices at the front-end of the inverter.

1.2.11 Altitude and Derating

In areas with altitude of more than 1,000 meters, the heat sinking effect of the inverter may turn poorer due to rare air. Therefore, it needs to derate the inverter for use. Please contact our company for technical consulting in case of such condition.

1.2.12 Certain Special Use

If the user needs to use the inverter with the methods other than the recommended wiring diagram in this manual, such as shared DC bus, please consult our company.

1.2.13 Note of Inverter Disposal

The electrolytic capacitors on the main circuit and the PCB may explode when they are burnt. Emission of toxic gas may be generated when the plastic parts are burnt. Please dispose the inverter as industrial wastes.

1.2.14 Adaptable Motor

1) The standard adaptable motor is four-pole squirrel-cage asynchronous induction motor. If such motor is not available, be sure to select adaptable motors in according to the rated current of the motor. In applications where drive permanent magnetic synchronous motor is required, please consult our company;

2) The cooling fan and the rotor shaft of the non-variable-frequency motor adopt coaxial connection. When the rotating speed is reduced, the cooling effect will be poorer. Therefore, a powerful exhaust fan should be installed, or the motor should be replaced with variable frequency motor to avoid the over heat of the motor.

3) Since the inverter has built-in standard parameters of the adaptable motors, it is necessary to perform motor parameter identification or modify the default values so as to comply with the actual values as much as possible, or it may affect the running effect and protection performance;

4) The short circuit of the cable or motor may cause alarm or explosion of the inverter. Therefore, please conduct insulation and short circuit test on the newly installed motor and cable. Such test should also be conducted during routine maintenance. Please note that the inverter and the test part should be completely disconnected during the test.

Chapter 2 Product Information

2.1 Product Inspection

Checking the following items when receiving the inverter

Confirmation Items	Method
Confirm if the inverter is what you ordered	Check name plate
Damaged or not	Inspect the entire exterior of the inverter to see if there are any scratches or other damage resulting from shipping
Confirm if the fastening parts (screws, etc.) are loose or not	Check with a screw driver if necessary
User's manual, certification and other spares	User's manual and the relative spares

Please contact the local agent or our company directly if there is any damage on the inverter.

2.2 Model Description

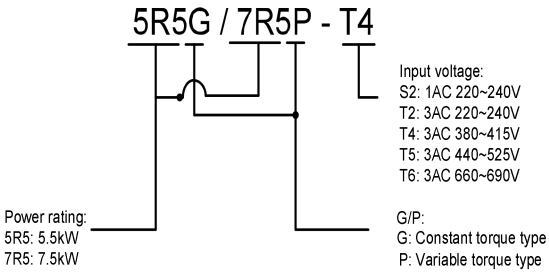

Figure 2-1 Model description

2.3 Description of Nameplate

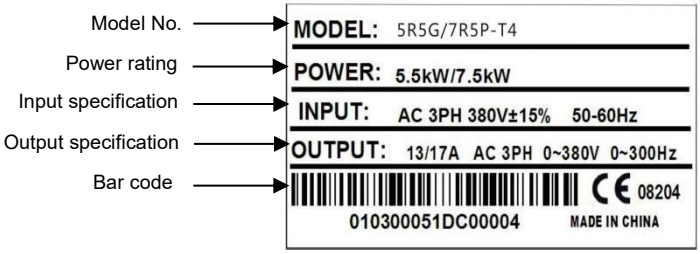

Figure 2-3 Nameplate description

2.4 Selection Guide

Table 2-1 Inverter Model and Technical Data

Inverter Model	Motor		Rated Input Current (A)	Rated Output Current (A)
	kW	HP		
1AC 220~240V±15% input/output				
04-0R4G-S2	0.4	0.5	5.4	4
04-0R7G-S2	0.75	1	8.2	7
04-1R5G-S2	1.5	2	14	9.6
04-2R2G-S2	2.2	3	23	17
04-004G-S2	4.0	5	35	25
04-5R5G-S2	5.5	7.5	45	32
04-7R5G-S2	7.5	10	60	45
04-011G-S2	11	15	80	60
1AC 220~240V±15% input / 3AC 220~240V±15% output				
0R4G-S2	0.4	0.5	5.4	2.3
0R7G-S2	0.75	1	8.2	4
1R5G-S2	1.5	2	14	7
2R2G-S2	2.2	3	23	9.6
004G-S2	4.0	5	40	17
5R5G-S2	5.5	7.5	60	25
7R5G-S2	7.5	10	75	32
011G-S2	11	15	110	45
015G-S2	15	20	140	60
018G-S2	18.5	25	175	75
022G-S2	22	30	210	90
030G-S2	30	40	255	110
3AC 220~240V±15% input/output				
0R4G-T2	0.4	0.5	3.4	2.3
0R7G-T2	0.75	1	5	4
1R5G-T2	1.5	2	7.7	7
2R2G-T2	2.2	3	13	9.6

004G-T2	4.0	5	23	17
5R5G-T2	5.5	7.5	35	25
7R5G-T2	7.5	10	45	32
011G-T2	11	15	60	45
015G-T2	15	20	80	60
018G-T2	18.5	25	100	75
022G-T2	22	30	120	90
030G-T2	30	40	150	110
037G-T2	37	50	200	150
045G-T2	45	60	240	176
055G-T2	55	75	280	210
075G-T2	75	100	410	304
090G-T2	90	125	460	340
110G-T2	110	150	700	520
132G-T2	132	175	790	585
160G-T2	160	210	970	720
3AC 380~415V±15%				
0R7G/1R5P-T4	0.75/1.5	1/2	3.4/5	2.1/3.8
1R5G/2R2P-T4	1.5/2.2	2/3	5/6.8	3.8/6
2R2G/004P-T4	2.2/4.0	3/5	6.8/10	6/9
004G/5R5P-T4	4.0/5.5	5/7.5	10/15	9/13
5R5G/7R5P-T4	5.5/7.5	7.5/10	15/20	13/17
7R5G/011P-T4	7.5/11	10/15	20/26	17/25
011G/015P-T4	11/15	15/20	26/35	25/32
015G/018P-T4	15/18.5	20/25	35/38	32/37
018G/022P-T4	18.5/22	25/30	38/46	37/45
022G/030P-T4	22/30	30/40	46/62	45/60
030G/037P-T4	30/37	40/50	62/76	60/75
037G/045P-T4	37/45	50/60	76/90	75/90
045G/055P-T4	45/55	60/75	92/113	90/110
055G/075P-T4	55/75	75/100	112/157	110/150
075G/090P-T4	75/90	100/125	157/180	150/176
090G/110P-T4	90/110	125/150	180/214	176/210
110G/132P-T4	110/132	150/175	214/256	210/253
132G/160P-T4	132/160	175/210	256/307	253/304
160G/185P-T4	160/185	210/250	307/350	304/340
185G/200P-T4	185/200	250/260	350/385	340/377
200G/220P-T4	200/220	260/300	385/430	377/423
220G/250P-T4	220/250	300/330	430/468	423/465
250G/280P-T4	250/280	330/370	468/525	465/520
280G/315P-T4	280/315	370/420	525/590	520/585
315G/350P-T4	315/350	420/470	590/665	585/650
350G/400P-T4	350/400	470/530	665/785	650/720
400G/450P-T4	400/450	530/600	785/840	720/820
450G/500P-T4	450/500	600/660	840/880	820/900
500G/560P-T4	500/560	660/750	880/980	900/1000
560G/630P-T4	560/630	750/840	980/1130	1000/1100
630G/710P-T4	630/710	840/950	1130/1290	1100/1250

710G-T4	710	950	1290	1200
800G-T4	800	1070	1450	1400
900G-T4	900	1200	1630	1580
1000G-T4	1000	1330	1800	1750
1200G-T4	1200	1600	2160	2100
1400G-T4	1400	1860	2420	2350
3AC 660~690V±15%				
015G-T6	15	20	21	19
018G-T6	18	25	28	22
022G-T6	22	30	35	28
030G-T6	37	40	40	35
037G-T6	37	50	47	45
045G-T6	45	60	55	52
055G-T6	55	75	65	63
075G-T6	75	100	90	86
090G-T6	90	105	100	98
110G-T6	110	130	130	121
132G-T6	132	175	170	150
160G-T6	160	210	200	175
185G-T6	185	250	210	195
200G-T6	200	260	235	215
220G-T6	220	300	257	245
250G-T6	250	330	265	260
280G-T6	280	370	305	300
315G-T6	315	420	350	330
350G-T6	350	470	382	374
400G-T6	400	530	435	410
450G-T6	450	600	490	465
500G-T6	500	660	595	550
560G-T6	560	745	610	590
630G-T6	630	840	710	680
710G-T6	710	950	800	770
800G-T6	800	1070	900	865
900G-T6	900	1200	1000	970
1000G-T6	1000	1330	1120	1080
1200G-T6	1200	1600	1290	1240
1400G-T6	1400	1860	1510	1460
1600G-T6	1600	2130	1780	1720

2.5 Technical Specifications

Table 2-2 Inverter Technical Specifications

Item	Technical Index	Specification
Input	Input voltage	1AC/3AC 220V±15%, 3AC 380V±15%, 3AC 660V±15%
	Input frequency	47~63Hz
Output	Output voltage	0～rated input voltage

	Output frequency	V/f control: 0~3000Hz Sensorless vector control: 0~300Hz
Control Features	Control mode	V/f control Sensorless vector control Torque control
	Operation command mode	Keypad control Terminal control Serial communication control
	Frequency setting mode	Digital setting, analog setting, pulse frequency setting, serial communication setting, multi-step speed setting & simple PLC, PID setting, etc. These frequency settings can be combined & switched in various modes.
	Overload capacity	G model: 150% 60s, 180% 10s, 200% 3s P model: 120% 60s, 150% 10s, 180% 3s
	Starting torque	0.5Hz/150% (SVC); 1Hz/150% (V/f)
	Speed adjustment range	1:100 (SVC), 1:50 (V/f)
	Speed control precision	±0.5% (SVC)
	Carrier frequency	1.0--16.0kHz, automatically adjusted according to temperature and load characteristics
	Frequency accuracy	Digital setting: 0.01Hz Analog setting: maximum frequency * 0.05%
	Torque boost	Automatically torque boost; manually torque boost: 0.1%~30.0%
	V/f curve	Three types: linear, multiple point and square type (1.2 power, 1.4 power, 1.6 power, 1.8 power, square)
	Acceleration/deceleration mode	Straight line/S curve; four kinds of acceleration/deceleration time, range: 0.1s~3600.0s
	DC braking	DC braking when starting and stopping DC braking frequency: 0.0Hz~maximum frequency, braking time: 0.0s~100.0s
	Jog operation	Jog operation frequency: 0.0Hz~maximum frequency Jog acceleration/deceleration time: 0.1s~3600.0s
	Simple PLC & multi-step speed operation	It can realize a maximum of 16 segments speed running via the built-in PLC or control terminal.
	Built-in PID	Built-in PID control to easily realize the close loop control of the process parameters (such as pressure, temperature, flow, etc.)
	Automatic voltage regulation	Keep output voltage constant automatically when input voltage fluctuating
Control Function	Common DC bus	Common DC bus for several inverters, energy balanced automatically
	Torque control	Torque control without PG
	Torque limit	“Rooter” characteristics, limit the torque automatically and prevent frequent over-current tripping during the running process
	Wobble frequency control	Multiple triangular-wave frequency control, special for textile
	Timing/length/ counting control	Timing/length/counting control function
	Over-voltage & over-current stall control	Limit current & voltage automatically during the running process, prevent frequent over-current & over-voltage tripping

	Fault protection function	Up to 30 fault protections including over-current, over-voltage, under-voltage, overheating, default phase, overload, shortcut, etc., can record the detailed running status during failure & has fault automatic reset function
Input/output terminals	Input terminals	Programmable DI: 7 on-off inputs, 1 high-speed pulse input 2 programmable AI: AI1: 0～10V or 0/4～20mA A12: 0～10V or 0/4～20mA
	Output terminals	1 programmable open collector output: 1 analog output (open collector output or high-speed pulse output) 2 relay output 2 analog output: 0/4~20mA or 0~10V
	Communication terminals	Offer RS485 communication interface, support MODBUS-RTU communication protocol
Human machine interface	LED display	Display frequency setting, output frequency, output voltage, output current, etc.
	Multifunction key	QUICK/JOG key, can be used as multifunction key
Environ-ment	Ambient temperature	-10℃～40℃, derated 4% when the temperature rise by every 1℃ (40℃～50℃).
	Humidity	90%RH or less (non-condensing)
	Altitude	≤1000M: output rated power, ＞1000M: output derated
	Storage temperature	-20℃～60℃

2.6 External & Installation Dimensions

2.6.1 Parts Description

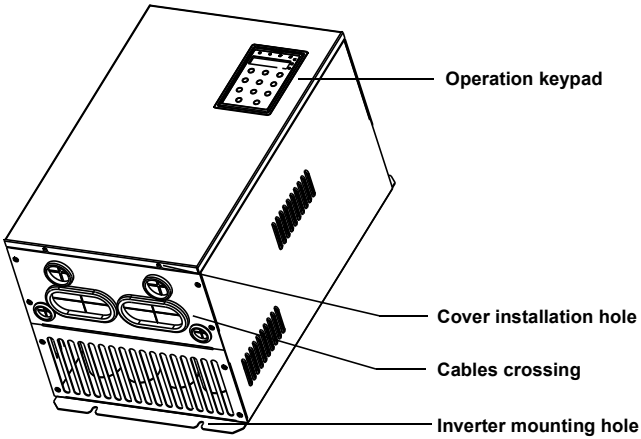

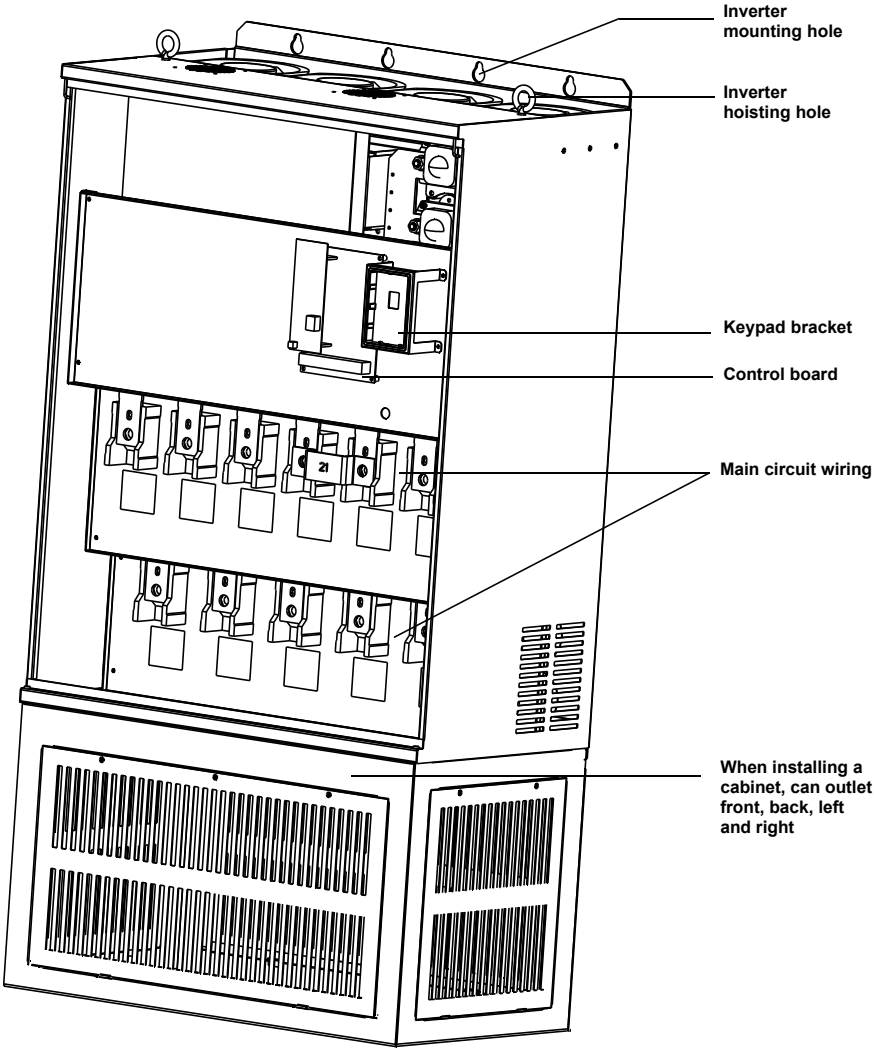

Figure 2-3 Parts of inverter

2.6.2 Series External & Installation Dimensions

1. AC 220V output 0.4～15kW inverters dimension

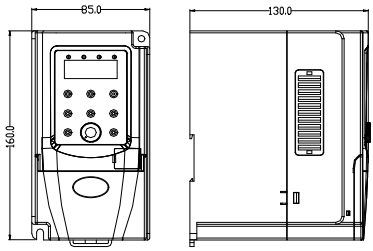

0.4～2.2kW

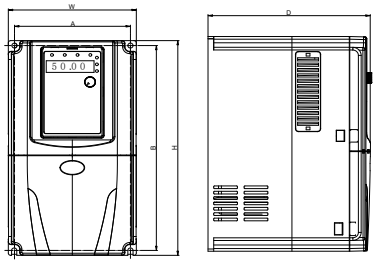

4-5.5KW

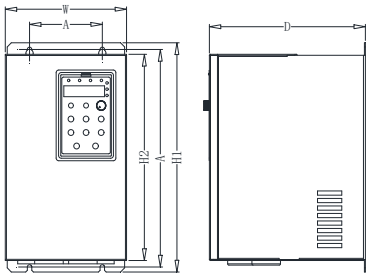

7.5kW 以上

Power Range	External Dimension (mm)				Installation Dimension (mm)			Mounting Bolt Model
	W	H1	H2	D	A1	A2	B	
4.0KW	135	240		173	122.6		229	M4
5.5KW	170	285		176	158		273.5	M4
7.5KW	200	329.1	300	177.2	90		316.6	M4
11KW	225	397.6	365	185.2	120		384.1	M5
15KW	255	439.6	402.4	209.6	140		423.6	M5

3AC 380V inverters dimension

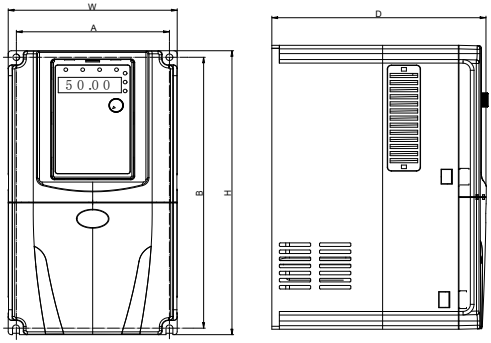

0.75～11kW

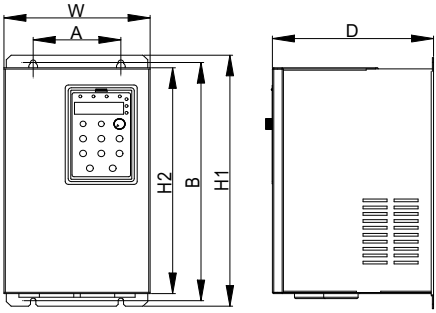

15～45kW

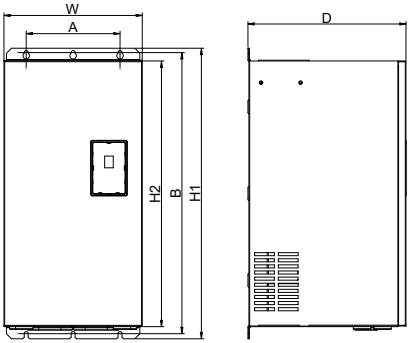

55～250kW (including 132～280kW standard inverter)

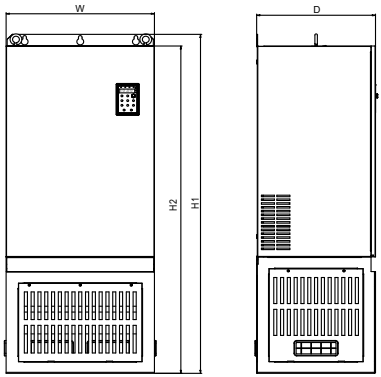

132～280kW non-standard inverter (with base)

Power Range	External Dimension (mm)				Installation Dimension (mm)		Mounting Bolt Model
	W	H1	H2	D	A	B	
0.75～5.5kW	110	185		153	98	174	M4
7.5kW **（D series 4～5.5kW）**	135	240		173	122.6	229	M4
11kW **(X series 15～18.5kW)**	170	285		176	158	273.5	M4
15～22kW	200	320	320	197	188	308.5	M4
D series 15～18.5kW	200	329.1	300	177.2	90	316.6	M4
D series 22kW	225	397.6	365	185.2	120	384.1	M5
30kW **(X series 37kW)**	225	397.6	365	215	120	384.1	M5
37～45kW	255	439.6	402.4	209.6	140	423.6	M5
X series 55～75kW	288	469.6	459.6	221	170	453.6	M5
55～90kW	280	570	521.2	258	190	552	M6
110kW **(D series 90kW) (X series 132kW)**	320	600	552	330	230	582	M8
132～160kW (without base)	320	715	662	330	230	695.5	M8
132～160kW (with base)	320	992	962	330	with base		

185～280kW (without base)	480	790	725	385	360	768	M10
185～280kW (with base)	480	1165	1125	385	with base		

Note: The standard inverter of 132~280kW has no base; the base is optional, and the inverter with base is non-standard.

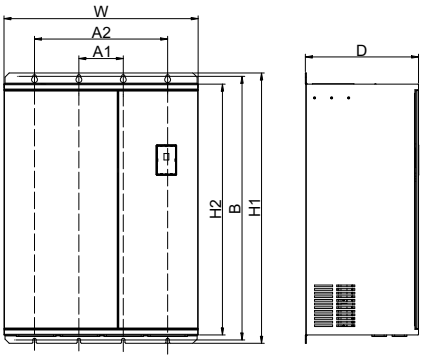

315～1400kW without base

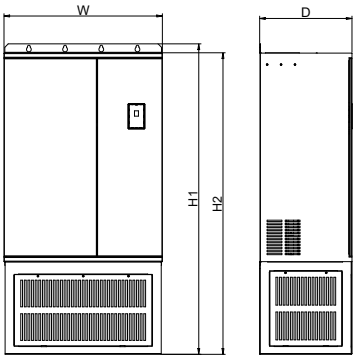

315～1400kW without base

Power Range	External Dimension (mm)				Installation Dimension (mm)			Mounting Bolt Model
	W	H1	H2	D	A1	A2	B	
315～400 kW (D series 280kW) (X series 450kW) (without base)	700	970	900	408	200	600	946	M10

315～400kW (D series 280kW) (X series 450kW) (with base)	700	1390	1350	408	with base			
450～800kW (without base)	940	1170	1100	458	280	820	1146	M10
450～800kW(with base)	940	1690	1650	458	with base			
900～1400kW (without base)	1250	1395	1300	600	370	1100	1356	M10
900～1400kW(with base)	1250	1955	1900	600	with base			

3AC 660V inverters dimension

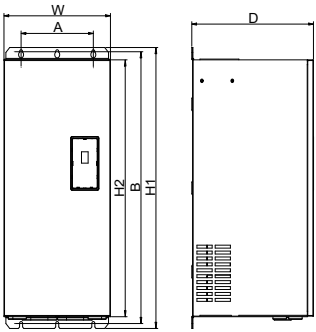

15～200kW (without base)

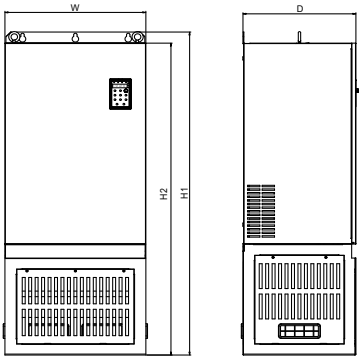

160～200kW (base is optional)

Power Range	External Dimension (mm)				Installation Dimension (mm)		Mounting Bolt Model
	W	H1	H2	D	A	B	
15~45kW (without base)	255	547	504.4	208.4	150	530.5	M6
55~90kW (without base)	320	715	662	330	230	695.5	M8
110～132kW **（D series 55～90kW）**	320	715	662	330	230	695.5	M8
160~200kW (without base)	480	790	725	385	360	768	M10
160~200kW (with base)	480	1165	1125	385	with base		

Note: Base is optional for 160~200kW inverters. Standard invertes are without base.

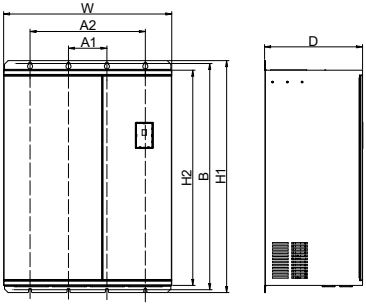

220～1600kW without base

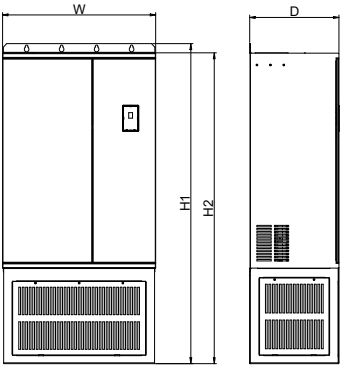

220～1600kW with base

Power Range	External Dimension (mm)				Installation Dimension (mm)			Mounting Bolt Model
	W	H1	H2	D	A1	A2	B	
220~315kW (without base)	700	970	900	408	200	600	946	M10
220~315kW (with base)	700	1390	1350	408	with base			
400~800kW **（D series 280～350kW）** (without base)	940	1170	1100	458	280	820	1146	M10
400~800kW **（D series 280～350kW）** (with base)	940	1690	1650	458	with base			
900~1600kW (without base)	1250	1395	1300	600	370	1100	1356	M10
900~1600kW (with base)	1250	1955	1900	600				

2.6.4 Keypad External Dimension

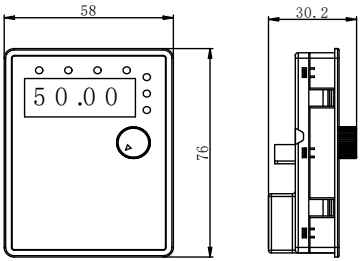

Keypad dimension of 1AC/3AC 220V 0.4~1.5kW inverters

Illustration: This keypad can be connected with the inverter externally by ordinary network cable, also can be mounted on the front side of panel directly. The suggested thickness of panel is 1.2mm.

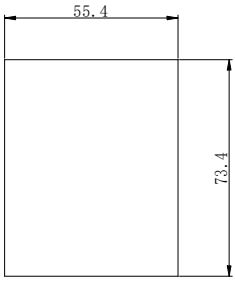

The installation size on the panel while using this keypad

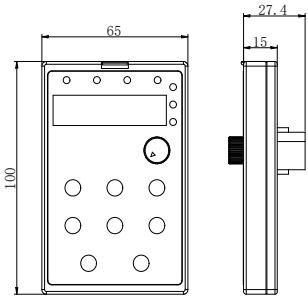

Keypad dimension of other inverters

Illustration: This keypad can be connected with the inverter externally by ordinary network cable, and it needs an additional bracket to fix it.

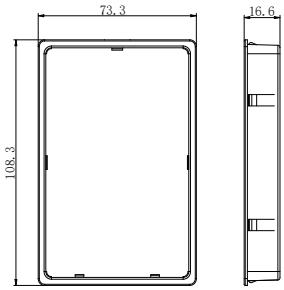

65*100mm keypad bracket dimension

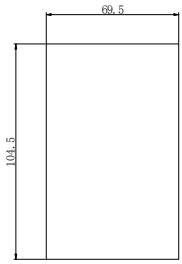

65*100mm hole dimension of keypad bracket

2.7 Routine Maintenance of Inverter

2.7.1 Routine Maintenance

The influence of the ambient temperature, humidity, dust and vibration will cause the aging of the devices in the inverter, which may cause potential fault of the inverter or reduce the service life of the inverter. Therefore, it is necessary to carry out routine and periodical maintenance on the inverter.

Routine inspection Items include:

1) Whether there is any abnormal change in the running sound of the motor;
2) Whether the motor has vibration during the running;
3) Whether there is any change to the installation environment of the inverter;
4) Whether the inverter cooling fan works normally;
5) Whether the inverter has over temperature.

Routine cleaning:

1) The inverter should be kept clean all the time.
2) The dust on the surface of the inverter should be effectively removed, so as to prevent the dust entering the inverter. Especially the metal dust is not allowed.

3) The oil stain on the inverter cooling fan should be effectively removed.

2.7.2 Periodic Inspection

Please perform periodic inspection on the places where the inspection is a difficult thing.

Periodic inspection Items include:

1) Check and clean the air duct periodically;
2) Check if the screws are loose;
3) Check if the inverter is corroded;
4) Check if the wire connector has arc signs;
5) Main circuit insulation test.

Remainder: When using the megameter (DC 500V megameter recommended) to measure the insulating resistance, the main circuit should be disconnected with the inverter. Do not use the insulating resistance meter to test the insulation of control circuit. It is not necessary to conduct the high voltage test (which has been completed upon delivery).

2.7.3 Replacement of Vulnerable Parts for Inverter

The vulnerable parts of the inverter include cooling fan and filter electrolytic capacitor, whose service life depends on the operating environment and maintenance status. General service life is shown as follows:

Part Name	Service Life
Fan	2~3 years
Electrolytic capacitor	4~5 years

The user can determine the year of replacement according to the operating time.

1) Cooling fan

Possible reason for damage: Bearing is worn and blade is aging.

Judging criteria: Whether there is crack on the blade and whether there is abnormal vibration noise upon startup.

2) Filter electrolytic capacitor

Possible reason for damage: Input power supply in poor quality, high ambient temperature, frequent load jumping, and electrolyte aging.

Judging criteria: Whether there is liquid leakage and whether the safe valve has projected, and measure the static capacitance, and the insulating resistance.

2.7.4 Storage of Inverter

Upon acquiring the inverter, the user should pay attention to the following points regarding the temporary and long-term storage of the inverter:

1) Pack the inverter with original package and place back into the packing box of our company.

2) Long-term storage will degrade the electrolytic capacitor. Thus, the product should be powered up once every 2 years, each time lasting at least five hours. The input voltage should be increased slowly to the rated value with the regulator.

2.8 Instructions on Warranty of Inverter

Free warranty only applies to the inverter itself.

1) We provide 12 months warranty (starting from the date of original shipment as indicated on the barcode) for the failure or damage under normal use conditions. If the equipment has been used for over 12 months, reasonable repair expenses will be charged.

2) Reasonable repair expenses will be charged for the following situations within 12 months:

a) The equipment is damaged because the user fails to comply with the requirements of the user's manual;

b) Damage caused by fire, flood and abnormal voltage;

3) Damage caused when the inverter is used for abnormal function.

The service expenses will be calculated according to the standard of the manufacturer. If there is any agreement, the agreement should prevail.

Chapter 3 Mechanical and Electric Installation

3.1 Mechanical Installation

3.1.1 Installation environment

1) Ambient temperature: The ambient temperature exerts great influences on the service life of the inverter and is not allowed to exceed the allowable temperature range (-10℃ to 50℃).

2) The inverter should be mounted on the surface of incombustible articles, with sufficient spaces nearby for heat sinking. The inverter is easy to generate large amount of heat during the operation. The inverter should be mounted vertically on the base with screws.

3) The inverter should be mounted in the place without vibration or with vibration of less than 0.6G, and should be kept away from such equipment as punching machine.

4) The inverter should be mounted in locations free from direct sunlight, high humidity and condensate.

5) The inverter should be mounted in locations free from corrosive gas, explosive gas or combustible gas.

6) The inverter should be mounted in locations free from oil dirt, dust, and metal powder.

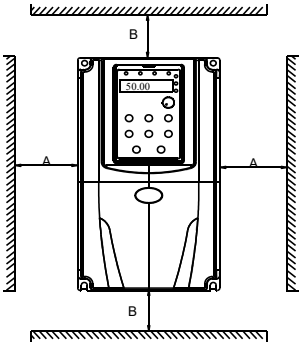

Single Unit Installation Diagram

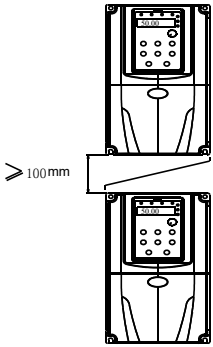

Installation Diagram of Upper and Down Parts

Figure 3-1 Installation Diagram

Single Unit Installation: When the inverter power is not higher than 15kW, the A size can be omitted. When the inverter power is higher than 15kW, the A size should be higher than 50mm.

Installation of Upper and Lower Parts: When installing the upper and lower parts of the inverter, the insulating splitter is required.

Power Rating	Mounting Dimension	
	B	A
≤15kW	≥100mm	≥50mm
18.5~30kW	≥200mm	≥50mm
≥37kW	≥300mm	≥50mm

3.1.2 Heat dissipation should be taken into account during the mechanical installation. Please pay attention the following items:

1) Install the inverter vertically so that the heat may be expelled from the top. However, the equipment cannot be installed upside down. If there are multiple inverters, parallel installation is a better choice. In applications where the upper and lower inverters need to be installed, please refer to Figure 3-1 “300A/300 Series Inverter Installation Diagram” and install an insulating splitter.

2) The mounting space should be as indicated as Figure 3-1, so as to ensure the heat dissipation space of the inverter. However, the heat dissipation of other devices in the cabinet should also be taken into account.

3) The installation bracket must be flame retardant.

4) In the applications where there are metal dusts, it is recommended to mount the radiator outside the cabinet. In this case, the space in the sealed cabinet should be large enough.

3.2 Electrical Installation

3.2.1 Guide to the external electrical parts

Table 3-1 Selection Guide of External Electrical Parts of Inverter

Inverter Model	Circuit Breaker (MCCB) A	Recommended Contactor A	Recommended Conducting Wire of Main Circuit at Input Side mm^2	Recommended Conducting Wire of Main Circuit at Output Side mm^2	Recommended Conducting Wire of Control Circuit mm^2
1AC 220V					
0R4G-S2	16	10	2.5	2.5	1.0
0R7G-S2	16	10	2.5	2.5	1.0
1R5G-S2	20	16	4.0	2.5	1.0
2R2G-S2	32	20	6.0	4.0	1.0
004G-S2	63	40	6.0	4.0	1.0
5R5G-S2	63	40	10	10	1.0
7R5G-S2	100	63	10	10	1.0
3AC 220V					
0R4G-T2	10	10	2.5	2.5	1.0
0R7G-T2	16	10	2.5	2.5	1.0
1R5G-T2	16	10	2.5	2.5	1.0
2R2G-T2	25	16	4.0	4.0	1.0
004G-T2	32	25	4.0	4.0	1.0
5R5G-T2	63	40	4.0	4.0	1.0
7R5G-T2	63	40	6.0	6.0	1.0
011G-T2	100	63	10	10	1.5
015G-T2	125	100	16	10	1.5
018G-T2	160	100	16	16	1.5

022G-T2	200	125	25	25	1.5
030G-T2	200	125	35	25	1.5
037G-T2	250	160	50	35	1.5
045G-T2	250	160	70	35	1.5
055G-T2	350	350	120	120	1.5
075G-T2	500	400	185	185	1.5
090G-T2	500	400	185	185	1.5
3AC 380V					
0R7G/1R5P-T4	10	10	2.5	2.5	1.0
1R5G/2R2P-T4	16	10	2.5	2.5	1.0
2R2G/004P-T4	16	10	2.5	2.5	1.0
004G/5R5P-T4	25	16	4.0	4.0	1.0
5R5G/7R5P-T4	32	25	4.0	4.0	1.0
7R5G/011P-T4	40	32	4.0	4.0	1.0
011G/015P-T4	63	40	4.0	4.0	1.0
015G/018P-T4	63	40	6.0	6.0	1.0
018G/022P-T4	100	63	6.0	6.0	1.5
022G/030P-T4	100	63	10	10	1.5
030G/037P-T4	125	100	16	10	1.5
037G/045P-T4	160	100	16	16	1.5
045G/055P-T4	200	125	25	25	1.5
055G/075P-T4	200	125	35	25	1.5
075G/090P-T4	250	160	50	35	1.5
090G/110P-T4	250	160	70	35	1.5
110G/132P-T4	350	350	120	120	1.5
132G/160P-T4	400	400	150	150	1.5
160G/185P-T4	500	400	185	185	1.5
185G/200P-T4	500	400	185	185	1.5
200G/220P-T4	600	600	150*2	150*2	1.5
220G/250P-T4	600	600	150*2	150*2	1.5
250G/280P-T4	800	600	185*2	185*2	1.5
280G/315P-T4	800	800	185*2	185*2	1.5
315G/350P-T4	800	800	150*3	150*3	1.5
350G/400P-T4	800	800	150*4	150*4	1.5
400G/450P-T4	1000	1000	150*4	150*4	1.5
450G/500P-T4	1000	1000	150*4	150*4	1.5
500G/560P-T4	1200	1200	180*4	180*4	1.5
560G/630P-T4	1200	1200	180*4	180*4	1.5
630G/710P-T4	1500	1500	180*4	180*4	1.5
710G-T4	1800	1800	200*4	200*4	1.5

3.2.2 Connection to peripheral devices

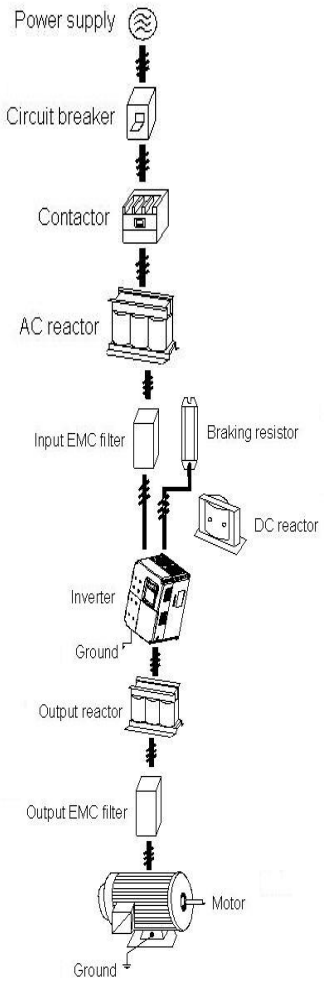

Figure3-2 Diagram of the connection to peripheral devices

- Do not install the capacitor or surge suppressor at the output side of the inverter, otherwise it may cause inverter failure or capacitor and surge suppressor damaged.

- The Inverter input / output (main circuit) contains harmonic components, it may interfere with inverter accessories communications equipment. Therefore, please install anti-interference filter to minimize interference.
- The details of external devices and accessories selection refer to the manual of external devices.

3.2.3 Using instruction of the external electrical parts

Table 3-2 Using Instruction of the External Electrical Parts

Part Name	Installing Location	Function Description
Circuit breaker	Front end of input circuit	Disconnect the power supply when the equipment at the lower part is over current.
Contactor	Between the circuit breaker and the inverter input side	Connection and disconnection of inverter. Frequent power-on and power-off operations on the inverter should be avoided.
AC input reactor	Input side of the inverter	Improve the power factor of the input side. Eliminate the higher harmonics of the input side effectively and prevent other equipment from damaging due to distortion of voltage wave. Eliminate the input current unbalance due to unbalance between the power phases.
EMC input filter	Input side of the inverter	Reduce the external conduction and radiation interference of the inverter. Decrease the conduction interference flowing from the power end to the inverter and improve the anti-interference capacity of the inverter.
DC reactor	DC reactor is optional for inverters above 30kW	Improve the power factor of the input side. Improve the whole efficiency and thermal stability of the inverter. Eliminate the impact of higher harmonics of the input side on the inverter and reduce the external conduction and radiation interference.
AC output reactor	Between the inverter output side and the motor, close to the inverter	The inverter output side generally has higher harmonics. When the motor is far from the inverter, since there are many distributed capacitors in the circuit, certain harmonics may cause resonance in the circuit and bring about the following two impacts: Degrade the motor insulation performance and damage the motor for the long run. Generate large leakage current and cause frequent inverter protection. In general, the distance between the inverter and the motor exceeds 100 meters, installation of output AC reactor is recommended.

3.2.4 Wiring diagram

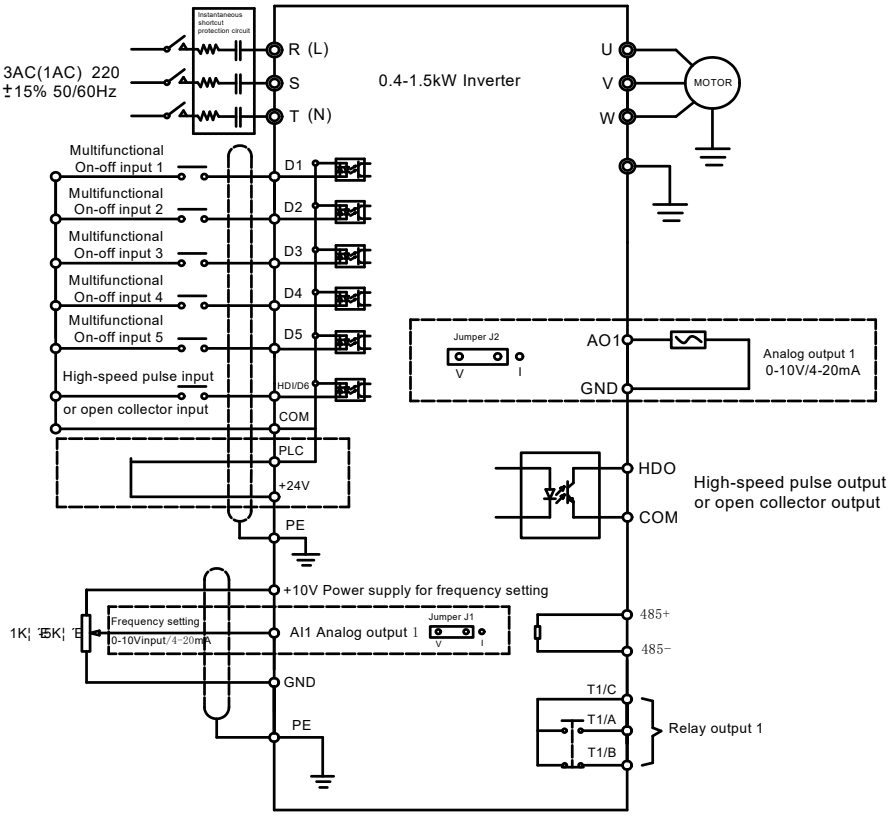

Figure 3-3 Wiring Diagram (1AC/3AC 220V 0.4~1.5kW)

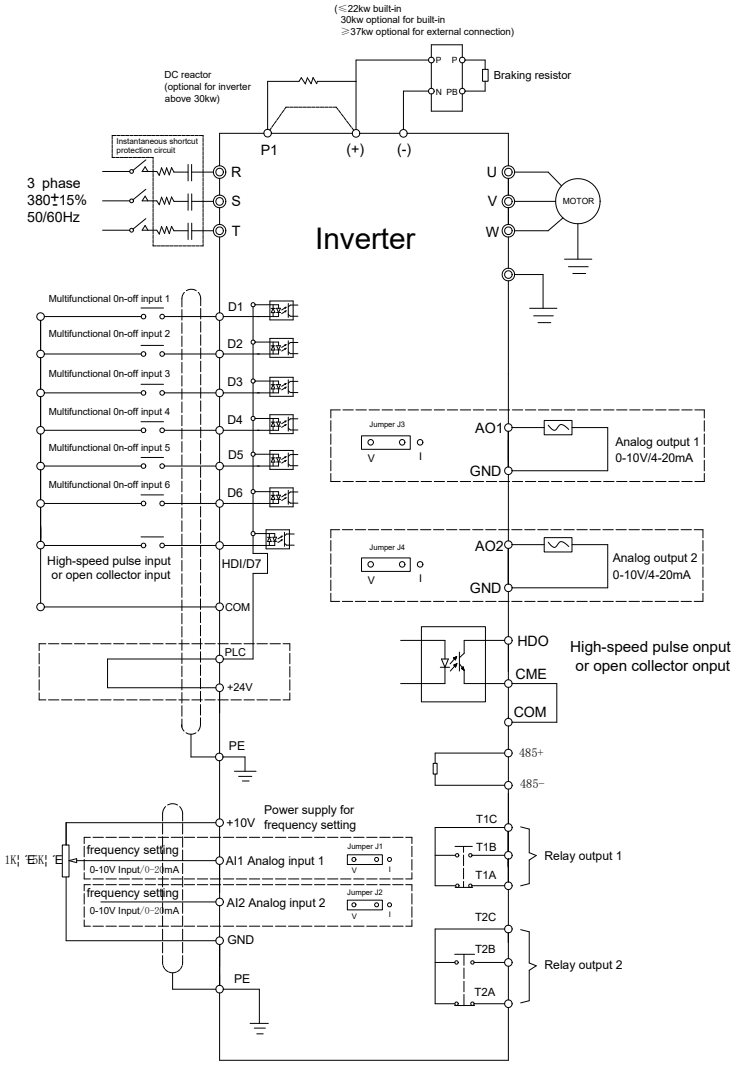

Figure 3-4 Wiring Diagram (>1.5kW)

Note:

1. Terminal ◎ refers to the main circuit terminal, terminal ○ refers to the control circuit terminal.

2. Built-in braking unit is standard in the inverters below 30kW, and optional for 30kW inverters.

3. Braking resistor is optional for user.

3.2.5 Main circuit terminals and connections

Danger

- Make sure that the power switch is at OFF status prior to perform wiring connection. Otherwise there may be danger of electric shock!
- Only the qualified and trained personnel can perform wiring connection. Otherwise it may cause equipment and human injuries!
- It should be earthed reliably. Otherwise there may be danger of electric shock or fire!

Caution

- Make sure that the rated value of the input power supply is consistent with that of the inverter. Otherwise it may damage the inverter!
- Make sure that the motor matches the inverter. Otherwise it may damage the motor or generate inverter protection!
- Do not connect the power supply to the terminals of U, V and W. Otherwise it may damage the inverter!
- Do not directly connect the brake resistor between the DC bus terminals (+) and (-). Otherwise it may cause fire!

1) Main circuit terminals

Figure 3-5 Main circuit terminals（1AC 220V, 0.4～1.5kW）

Figure 3-6 Main circuit terminals（3AC 220V, 0.4～1.5kW）

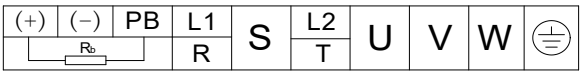

Figure 3-7 Main circuit terminals（1AC/3AC 220V, 2.2kW; 3AC 380V, 0.75～11kW）

Figure 3-8 Main circuit terminals（3AC 380V, 15~22kW）

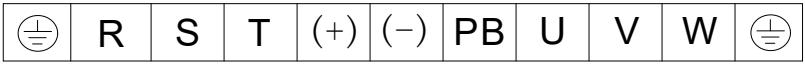

Figure 3-9 Main circuit terminal（3AC 380V, 30kW）

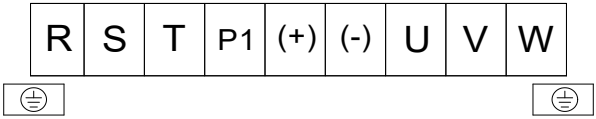

Figure 3-10 Main circuit terminals（3AC 380V, 37～75kW）

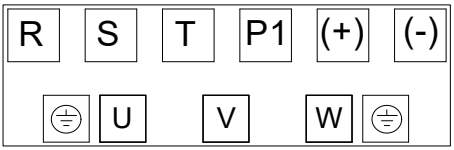

Figure 3-11 Main circuit terminals（3AC 380V, 90～1400kW）

2) Instructions of main circuit terminals

Terminal	Name	Description
R, S, T (3 AC) L, N (1 AC)	Input terminal of AC power supply	Connect to three phase or single phase AC power
(+) , (-)	Negative and positive terminals of DC bus	Common DC bus input point (connection point of external brake unit of the inverters above 15kw 220V and above 30kW other voltages)
(+) , PB	Connection terminal of brake resistor	Connection point of brake resistor of the inverters below 18.5kW (220V) & the inverters below 37kW (other voltages)
P1, (+)	Connection terminal of external DC reactor	Connection point of external DC reactor
U, V, W	Output terminal of inverter	Connect to the three phase motor
⏚	Earth terminal	Earth connection terminal

Precautions on Wiring:

a) Input power R, S and T or L, N:
There is no phase sequence requirement for the cable connection at the input side of the inverter,

b) DC bus (+) and (-) terminals:
Note that the (+) and (-) terminals of DC bus have residual voltage right after power-on. It needs to wait until the CHARGE indictor is OFF and make sure that the voltage is less than 36V prior to wiring connection. Otherwise there may be danger of electric shock.
When selecting external brake unit for the inverter above 30kW, the poles of (+) and (-) should not be connected reversely, or it may damage the inverter and even cause fire.
The wiring length of the brake unit should not exceed 10 meters. Twisted wires or pair wires should be used and connected in parallel.
Do not connect the brake resistor directly to the DC bus, or it may damage the inverter and even cause fire.

c) Connecting terminals (+) and PB of brake resistor:
The connecting terminals of the brake resistor are effective only for the inverter of less than 37kW with built-in brake unit.

The prototype of brake resistor can refer to the recommended value and the wiring length should be less than 5 meters. Otherwise it may damage the inverter.

d) Connecting terminals P1 and (+) of external DC reactor:
For the inverter above 30kW with external reactor, when assembling, remove the connector between terminals P1 and (+), and connect a DC reactor instead.

e) Terminals U, V, W at the output side of the inverter:
The inverter output side cannot connect to the capacitor or surge absorber. Otherwise, it may cause frequent inverter protection and even damage the inverter.
In case the motor cable is too long, it may generate electrical resonance easily due to the impact of distributed capacitance, thus damaging the motor insulation or generating higher leakage current to invoke over current protection of the inverter. When the length of motor cable is longer than 100 meters, it needs to install an AC output reactor.

f) Earth terminal PE ⏚:
This terminal should be earthed reliably, with resistance of earth cable of less than 0.1Ω. Otherwise, it may cause fault or damage the inverter.

Do not share the earth terminal ⏚ and zero line of the power supply.

3.2.6 Control terminals and connections

1) Control circuit terminals

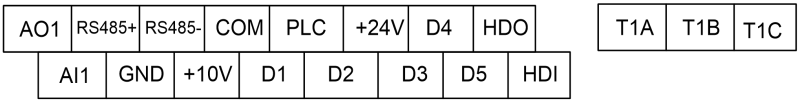

Figure 3-12 Control Circuit Terminals（1AC/3AC 220V, 0.4～1.5kW）

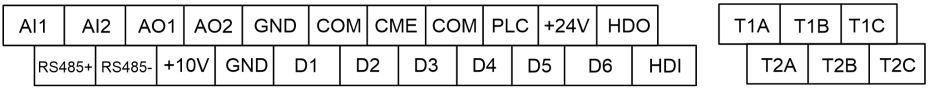

Figure 3-13 Control Circuit Terminals（2.2～1400kW）

2) Function description of control terminal

Table 3-3 Description of Control Terminal Function

Type	Terminal Symbol	Terminal Name	Function Description
Power Supply	+10V~GND	External +10V power	Provide +10V power supply for external units, and the maximum output current is 10mA. It is generally used as the operating power supply for the external potentiometer. The potentiometer resistance range is 1kΩ~5kΩ.
	+24V~COM	External +24V power	Provide +24V power supply for external units. It is generally used as the operating power supply for digital input/output terminals and the external sensor. The maximum output current is 200mA.

	PLC	External power input terminal	Connect to 24V by default upon delivery When external signal is used to drive D1 ~ D6, and HDI, PLC needs to connect to the external power supply and disconnect from the +24V power terminal
Analog Input	AI1~GND	Analog input terminal 1	1. Input range: DC 0V~10V/4mA~20mA, determined by J1 jumper on the control board. 2. Input impedance: 20kΩ (voltage); 500Ω(current)
	AI2~GND	Analog input terminal 2	1. Input range: DC 0V~10V/4mA~20mA, determined by J2 jumper on the control board. 2. Input impedance: 20kΩ (voltage); 500Ω(current)
Digital Input	D1	Digital input 1	1. Optical coupling isolation, compatible with dual polarity input 2. Input impedance: 4.7kΩ 3. Voltage range for level input: 9V ~30V
	D2	Digital input 2	
	D3	Digital input 3	
	D4	Digital input 4	
	D5	Digital input 5	
	D6	Digital input 6	
	HDI~CME/ D7~COM	High-speed pulse input terminal	In addition to the characteristics of D1 to D6, it can also be used as the high speed pulse input channel. Maximum input frequency is 100kHz Caution: The CME is internally insulated with the COM, but they have been short circuited externally (HDI is driven by +24V by default prior to delivery). When HDI needs to be driven by the external power, the short circuited between CME and COM must be disconnected.
Analog Output	AO1~GND	Analog output 1	The voltage or current output is determined by J3 jumper on the control board. Output voltage range: 0V~10V. Output current range: 0mA~20mA.
	AO2~GND	Analog output 2	The voltage or current output is determined by J4 jumper on the control board. Output voltage range: 0V~10V. Output current range: 0mA~20mA.
Digital Output	HDO~CME	High speed pulse output / open collector output	It can be used as high speed pulse output or open collector output which is determined by function code P5-00. High speed pulse output: maximum frequency is 100kHz Open collector output :Optical coupling isolation, dual polarity Output voltage range: 0V~24V Output current range: 0mA~50mA Note: The CME is internally insulated with the COM, but they have been short circuited externally (HDO is driven by +24V by default prior to delivery).
Relay Output 1	T1B-T1C	Normally closed terminal	Driving capacity: AC 250V, 3A, COSØ=0.4 DC 30V, 1A
	T1A-T1C	Normally open terminal	

Relay Output 2	T2B-T2C	Normally closed terminal	Driving capacity: AC 250V, 3A, COSØ=0.4 DC 30V, 1A
	T2A-T2C	Normally open terminal	

3) Description of connection of control terminals

a) Analog input terminal

Since the weak analog voltage signal is easy to suffer external interferences, it needs to employ shielded cable generally and the length should be no longer than 20 meters, as shown in Figure 3-15. In case the analog signal is subject to severe interference, and filter capacitor or ferrite magnetic core should be installed at analog signal source side, as shown in Figure 3-16.

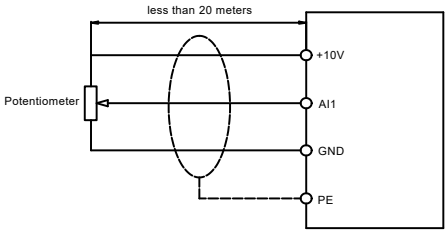

Figure 3-14 Connection of analog input

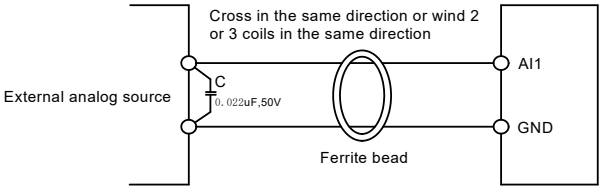

Figure 3-15 Connection of analog Input

b) Digital input terminal

It needs to employ shielded cable generally, with cable length of no more than 20 meters. When active driving is adopted, necessary filtering measures should be taken to prevent the interference to the power supply.

It is recommended to use the contact control mode.

D1~D7 terminal connection: **NPN type**

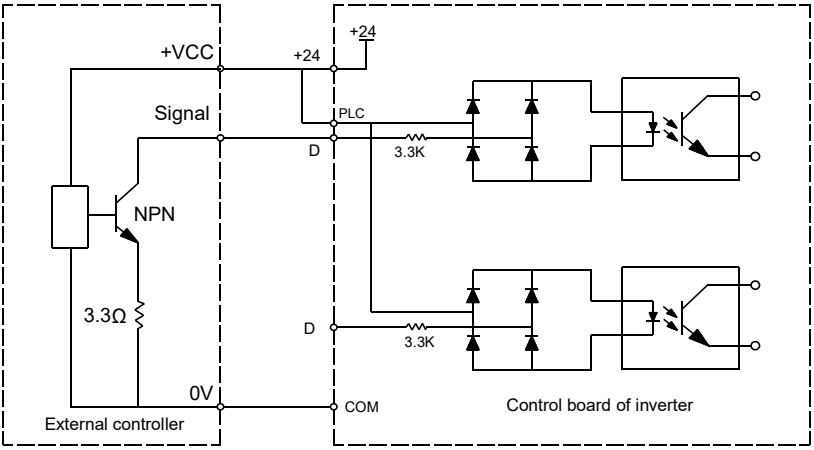

Figure 3-16 NPN type wiring

This is the most commonly used wiring connection, if external power supply is used, the +24V terminal must disconnect with PLC terminal. The positive pole of external power supply should connect with PLC terminal, and the negative pole connects with COM.

D1~D7 terminal connection: **PNP type**

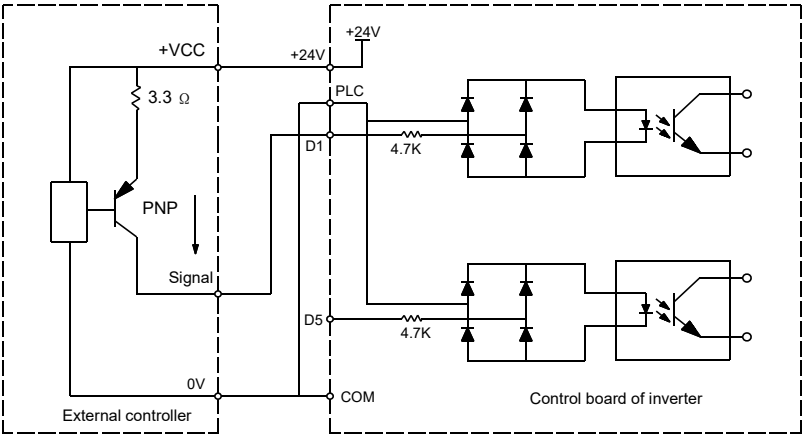

Figure 3-17 PNP type wiring

In this type, +24V terminal must disconnect with PLC terminal, +24V should connect the common port of external controller, and meantime short connect PLC and COM.

Chapter 4 Operation and Display

4.1 Keypad Description

With the operation keypad, it can perform such operations on the inverter as function parameter modification, working status monitor and running control (start and stop).

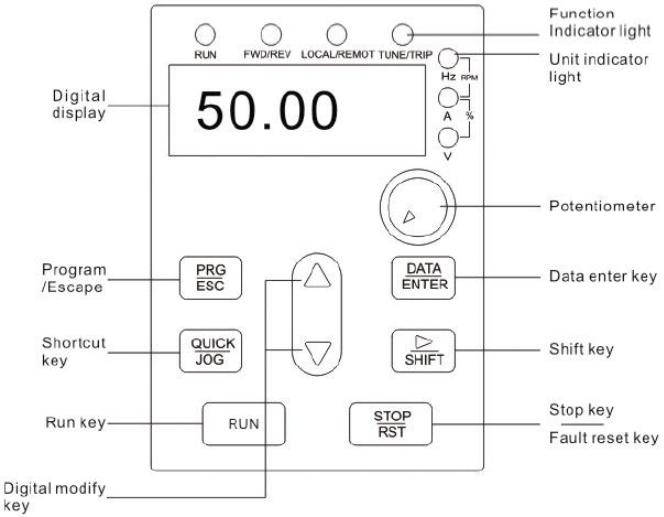

Figure4-1 Operation Keypad Diagram

1) Function key description

Function indicator	Description
RUN	Extinguished: stop status Light on: operating status
FWD/REV	Extinguished: forward operation Light on: reverse operation
LOCAL/REMOT	Extinguished: keypad control Flickering: communication control Light on: terminal control
TUNE/TRIP	Light on: torque control Flickering slowly: parameter autotuning status Flickering quickly: fault status

2) Unit indicator light description

Unit indicator	Description
Hz	Frequency unit
A	Current unit
V	Voltage unit
RPM	Rotation speed unit
%	Percentage

3) Digital display zone

Five-number digit LED display, can display setting frequency, output frequency, various monitoring data and alarm code.

4) Keypad button description

Button	Name	Function
PRG/ESC	Programming key	Entry and exit of primary menu
DATA/ENTER	Confirmation key	Progressively enter menu, and confirm parameters
△	Increment key	Progressively increase of data or function codes
▽	Decrement key	Progressively decrease of data or function codes
▷	Shift key	Select the displayed parameters in turn on the stop display interface and running display interface, and select the modification bit of parameters when modifying parameters.
RUN	Running key	Start to run inverter under keyboard control mode
STOP/RST	Stop/reset	Stop inverter in running status and reset operation in fault alarm status. The button's characteristics are restricted by function code P7-02.
QUICK/JOG	Multi-function selection key	According to P7-01, take function switching selection.

4.2 Function Code Checking and Modification Methods Description

The operation keypad of the 300A/300 Series Inverter adopts three-level menu structure to carry out operations such as parameter setting.
The three-level menu includes function parameter group (level 1 menu) → Function code (level 2 menu) → Function code setting value (level 3 menu). Refer to Figure 4-2 for the operation procedure.

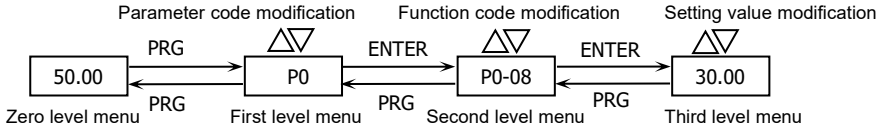

Figure 4-2 Operation Procedure of Three-level Menu

Description: When operating on level 3 menu, press PRG key or ENTER key to return to level 2 menu. The difference between PRG key and ENTER key is described as follows: Pressing ENTER KEY will save the setup parameter and return to the level 2 menu and then automatically shift to the next function code, while pressing PRG key will directly return to level 2 menu without saving the parameter, and it will return to the current function code.

Example: Modify the function code P3-02 from 10.00Hz to 15.00Hz. (The bold-type word indicates the flashing bit.)

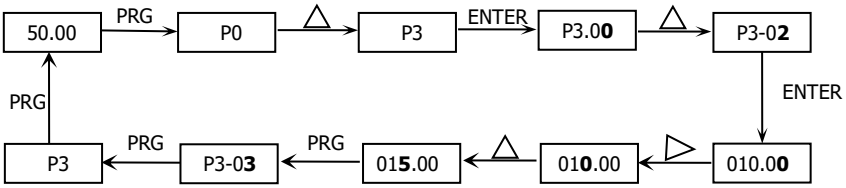

In level 3 menu, if there is no flashing bit, it indicates that the function code cannot be modified. The possible reasons include:
1) The function code is an unchangeable parameter, such as actual detection parameter, running record parameter, etc.
2) The function code cannot be modified in running status. It can be modified only after the unit is stopped.

4.3 Power-on Initialization

Firstly the system initializes during the inverter power-on, and LED displays “8.8.8.8.8.8”. After initialization, the inverter is in fault protection status if a fault happens, or the inverter is in stand-by status

4.4 Fault Protection

In fault status, inverter will display fault code & record output current, output voltage, etc. For details, please refer to P9 (fault and protection) parameter group. Fault can be reset via STOP/RST key or external terminals.

4.5 Stand By

In stop or stand by status, parameters of multi-status can be displayed. Whether or not to display this parameter can be chosen through function code P7-05 (Stop status display parameter) according to binary bits.
In stop status, there are thirteen parameters can be chosen to display or not. They are: setting frequency, bus voltage, DI input status, DO output status, analog input AI1 voltage, analog input AI2 voltage, radiator temperature, count value, actual length, PLC running step, load speed display, PID setting, HDI input pulse frequency. The displaying of the chosen parameters can be switched in sequence by press “ ▷ ” button.
Power on after power-off, the displayed parameters would be default considered as the chosen parameters before power-off.

4.6 Running

In running status, there are thirty two parameters can be chosen to display or not through function code P7-04 (running status display parameter 2) according to binary bits. They are: running frequency, setting frequency, DC bus voltage, output voltage, output current, output torque, DI input status, DO output status, analog input AI1 voltage, analog input AI2 voltage, radiator temperature, actual count value, actual length, line speed, PID setting, PID feedback, etc. The displaying of the chosen parameters can be switched in sequence by pressing “▷ ” button.

4.7 Password Setting

The inverter provides user password protection function. When PP-00 is set to non-zero value, it indicates the user password, and the password protection turns valid after exiting the function code editing status. When pressing PRG key again, “------“will be displayed, and common menu cannot be entered until user password is input correctly.
To cancel the password protection function, enter with password and set PP-00 to “0”.

4.8 Motor Parameters Autotuning

To select the vector control running mode, it must input the nameplate parameter of the motor accurately prior to the running of the inverter. The Inverter will select standard motor parameters matching the nameplate parameter. Since the vector control mode relies highly on the motor parameters, it must acquire the accurate parameters of the controlled motor to ensure the good control performance.

The procedures for the automatic tuning of motor parameters are described below:

First, select the command source (P0-02) as the command channel of the operation keypad. Second, input the following parameters in accordance with the actual motor parameters:
P1-01: Rated motor power
P1-02: Rated motor voltage
P1-03: Rated motor current
P1-04: Rated motor frequency
P1-05: Rated rotation speed of motor

If the motor is completely disconnected from the load, set P1.11 to “2” (complete tuning), and press RUN key on the keyboard keypad, then the inverter will automatically calculate the following parameters:

P1-06: Stator resistance
P1-07: Rotor resistance
P1-08: Leakage inductance
P1-09: Mutual inductance
P1-10: Current without load

Finally, complete the automatic tuning of motor parameters.

If the motor cannot be completely disconnected with the load, set P1-11 to “1” (static tuning), and then press RUN key on the keyboard panel.

The following motor parameters can be calculated automatically:
P1-06: Stator resistance
P1-07: Rotor resistance
P1-08: Leakage inductive reactance

Chapter 5 Function Parameter List

The function parameters of inverter have been divided into 19 groups including P0~PP, A0, U0 according to the function. Each function group contains certain function codes. For example, “P1-10” means the tenth function code in the P1 function group. P0~PE are basic function parameter groups; PF is factory parameter group (users are forbidden to access); A0 is torque control function parameter group; U0 is monitor function parameter group.

If PP-00 is set to non-zero value, it means parameter protection password is set, and the parameter menu cannot be entered until correct password is input. To cancel the password, please set PP-00 to “0”.

A0 and U0 are default hidden parameter groups, which can be displayed by modifying PP-02.

The instruction of the symbols in function parameter list is as following:

“○”：means that the parameter setting value can be modified on stop and running status.

“◎”：means that the parameter setting value cannot be modified on the running status.

“●”：means that the value of the parameter is the real detection value which cannot be modified.

5.1 Basic Function Parameter Table

Function code	Name	Detailed instruction	Factory default	Modify
P0 Group: Basic Function				
P0-00	Inverter model	1: G model (constant torque load model) 2: P model (fan and pump load model)	1	◎
P0-01	Control mode	0: V/F control 1: Sensorless vector control	0	◎
P0-02	Running command source	0: Keypad (LED OFF) 1: Terminal (LED ON) 2: Communication (LED flickers)	0	◎
P0-03	Main frequency source A selection	0: Keypad (P0-08, UP and DOWN Adjustable, non-recorded) 1: Keypad (P0-08, UP and DOWN Adjustable, recorded) 2: AI1 3: AI2 4: Keypad potentiometer 5: High speed pulse (HDI) 6: Multi-step speed 7: Simple PLC 8: PID 9: Communication	1	◎
P0-04	Auxiliary frequency source B selection	The same as P0-03	0	◎
P0-05	Reference of Frequency source B	0: Relative to maximum frequency 1: Relative to frequency source A	0	○
P0-06	Range of Auxiliary Frequency source B	0%～150%	100%	○
P0-07	Frequency source selection	Units place: frequency source selection 0: Main frequency source A 1: Calculation result of frequency A and B (determined by tens place) 2: Switching between A and B 3: Switching between A and calculation result 4: Switching between B and calculation result Tens place: calculation relationship between frequency A and B	00	○

Function code	Name	Detailed instruction	Factory default	Modify
		0: A + B 1: A - B 2: Max (A, B) 3: Min (A, B)		
P0-08	Keypad reference frequency	0.00Hz ~ maximum frequency:P0-10	50.00Hz	○
P0-09	Running direction selection	0: Forward 1: Reverse	0	○
P0-10	Maximum frequency	50.00Hz ~ 300.00Hz	50.00Hz	◎
P0-11	Frequency source upper limit	0: P0-12 1: AI1 2: AI2 3: Keypad potentiometer 4: HDI 5: Communication	0	◎
P0-12	Frequency upper limit	P0-14 (frequency lower limit) ~ P0-10 (max. frequency)	50.00Hz	○
P0-13	Frequency upper limit offset	0.00Hz ~ P0-10 (max. frequency)	0.00Hz	○
P0-14	Frequency lower limit	0.00Hz ~ P0-12 (frequency upper limit)	0.00Hz	○
P0-15	Carrier frequency	1.0kHz ~ 16.0kHz	Model depend	○
P0-16	Carrier frequency adjusting according to temperature	0: No 1: Yes	1	○
P0-17	Acceleration time 1	0.01s ~ 36000s	Model depend	○
P0-18	Deceleration time 1	0.01s ~ 36000s	Model depend	○
P0-19	ACC/DEC time unit	0: 1s 1: 0.1s 2: 0.01s	1	◎
P0-21	Auxiliary frequency source offset frequency when combination	0.00Hz ~ P0-10 (max. frequency)	0.00Hz	○
P0-22	Frequency command resolution	1: 0.1Hz 2: 0.01Hz	2	◎
P0-23	Digital setting frequency storage selection when stop	0: Not store 1: Store	1	○
P0-24	Reserved			●

Function code	Name	Detailed instruction	Factory default	Modify
P0-25	ACC/DEC time reference frequency	0: P0-10 (max. frequency) 1: Setting frequency 2: 100Hz	0	◎
P0-26	Running frequency command UP/DN reference	0: Running frequency 1: Setting frequency	0	◎
P0-27	Command source combination with frequency source	Units place: Operation keypad command combination with frequency source 0: No combination 1: Keypad 2: AI1 3: AI2 4: Keypad potentiometer 5: High speed pulse HDI 6: Multi-step speed 7: Simple PLC 8: PID 9: Communication Tens place: Terminal command combination with frequency source Hundreds place: Communication command combination with frequency source	000	○
P1 Group: Motor Parameters				
P1-00	Motor type	0: Common asynchronous motor 1: Variable frequency asynchronous motor	0	◎
P1-01	Rated power	0.1kW ~ 1000.0kW	Model depend	◎
P1-02	Rated voltage	1V ~ 2000V	Model depend	◎
P1-03	Rated current	0.01A ~ 655.35A (Inverter power≤55kW) 0.1A ~ 6553.5A (Inverter power＞55kW)	Model depend	◎
P1-04	Rated frequency	0.00Hz ~ P0-10 (max. frequency)	Model depend	◎
P1-05	Rated speed	1rpm ~ 36000rpm	Model depend	◎
P1-06	Stator resistance	0.001Ω ~ 65.535Ω (Inverter power≤55kW)	Motor paramet	◎

Function code	Name	Detailed instruction	Factory default	Modify
		0.0001Ω ~ 6.5535Ω (Inverter power＞55kW)	er	
P1-07	Rotor resistance	0.001Ω ~ 65.535Ω (Inverter power≤55kW) 0.0001Ω ~ 6.5535Ω (Inverter power＞55kW)	Motor paramet er	◎
P1-08	Leakage inductance	0.01mH ~ 655.35mH (Inverter power≤55kW) 0.001mH ~ 65.535mH (Inverter power＞55kW)	Motor paramet er	◎
P1-09	Mutual inductance	0.01mH ~ 655.35mH (Inverter power≤55kW) 0.001mH ~ 65.535mH (Inverter power＞55kW)	Motor paramet er	◎
P1-10	No-load current	0.01A ~ P1-03 (rated current) (Inverter power≤55kW) 0.1A ~ P1-03 (rated current) (Inverter power＞55kW)	Motor paramet er	◎
P1-11	Parameters autotuning	0: No action 1: Static autotuning 2: Rotation autotuning	0	◎
P2 Group: Vector Control Parameters				
P2-00	Speed loop proportional gain 1	1 ~ 100	30	○
P2-01	Speed loop integration time 1	0.01s ~ 10.00s	0.50s	○
P2-02	Low switching frequency	0.00 ~ P2-05	5.00Hz	○
P2-03	Speed loop proportional gain 2	1 ~ 100	20	○
P2-04	Speed loop integration time 2	0.01s ~ 10.00s	1.00s	○
P2-05	High switching frequency	P2-02 ~ P0-10 (max. frequency)	10.00Hz	○
P2-06	Vector control slip compensation coefficient	50% ~ 200%	100%	○
P2-07	Speed loop filter time	0.000s ~ 0.100s	0.000s	○
P2-08	Vector control over excitation gain	0 ~ 200	64	○
P2-09	Torque upper limit source selection in speed control mode	0: P2-10 1: AI1 2: AI2	0	○

Function code	Name	Detailed instruction	Factory default	Modify
		3: Keypad potentiometer 4: High speed pulse HDI 5: Communication 6: Min (AI1, AI2) 7: Max (AI1, AI2) Full scale of 1-7 selection corresponds to P2-10		
P2-10	Torque upper limit digital setting	0.0% ~ 200.0%	150.0%	○
P3 Group: V/F Control Parameters				
P3-00	V/F curve setting	0: Linear 1: Multiple-point 2: Square 3: 1.2 power 4: 1.4 power 6: 1.6 power 8: 1.8 power	0	◎
P3-01	Torque boost	0.0: auto 0.1% ~ 30.0%	Model depend	○
P3-02	Torque boost cutoff frequency	0.00Hz ~ P0-10 (max. frequency)	50.00Hz	◎
P3-03	V/F frequency point 1	0.00Hz ~ P3-05	0.00Hz	◎
P3-04	V/F voltage point 1	0.0% ~ 100.0%	0.0%	◎
P3-05	V/F frequency point 2	P3-03 ~ P3-07	0.00Hz	◎
P3-06	V/F voltage point 2	0.0% ~ 100.0%	0.0%	◎
P3-07	V/F frequency point 3	P3-05 ~ P1-04 (motor rated power)	0.00Hz	◎
P3-08	V/F voltage point 3	0.0% ~ 100.0%	0.0%	◎
P3-09	V/F slip compensation gain	0.0% ~ 200.0%	0.0%	○
P3-10	V/F over excitation gain	0 ~ 200	64	○
P3-11	V/F oscillation suppression gain	0 ~ 100	Model depend	○
P3-12	V/F oscillation suppression mode	0~1	0	◎
P4 Group: Input Terminal				
P4-00	D1 terminal function	0: No function 1: Forward (FWD) 2: Reverse (REV) 3: Three-line running control	1	◎
P4-01	D2 terminal function		2	◎
P4-02	D3 terminal function		0	◎

Function code	Name	Detailed instruction	Factory default	Modify
P4-03	D4 terminal function	4: Forward Jog (FJOG) 5: Reverse Jog (RJOG) 6: Terminal UP 7: Terminal DOWN 8: Coast to stop 9: Fault reset (RESET) 10: Pause running 11: External fault (normal open) input 12: Multi-step speed terminal 1 13: Multi-step speed terminal 2 14: Multi-step speed terminal 3 15: Multi-step speed terminal 4 16: ACC/DEC selection terminal 1 17: ACC/DEC selection terminal 2 18: Main frequency source switching 19: UP and DOWN setting clear (terminal and keypad) 20: Running command switching terminal 21: ACC/DEC invalid 22: PID Pause 23: PLC status reset 24: Wobble frequency pause 25: Counter input 26: Counter reset 27: Length count input 28: Length reset 29: Torque control invalid 30: PULSE frequency input (only valid for HDI) 31: Reserved 32: DC braking command 33: External fault (normal closed) input 34: Frequency modification enabled 35: PID action direction reverse 36: External stop terminal 1 37: Control command switching terminal 2 38: PID integration stop 39: Switch frequency source A to preset frequency 40: Switch frequency source B to preset frequency	0	◎
P4-04	D5 terminal function		0	◎
P4-05	D6 terminal function		0	◎
P4-06	HDI terminal function		0	◎

Function code	Name	Detailed instruction	Factory default	Modify
		41~42: Reserved 43: PID parameter switching 44: Customized fault 1 45: Customized fault 2 46: Speed control / torque control switching 47: Emergency stop 48: External stop terminal 2 49: Deceleration DC braking 50: The running time reset		
P4-07 ~ P4-09	Reserved			●
P4-10	Terminal filter time	0.000s ~ 1.000s	0.010s	○
P4-11	Terminal command mode	0: Two-line mode 1 1: Two-line mode 2 2: Three-line mode 1 3: Three-line mode 2	0	◎
P4-12	UP/DN change rate	0.001Hz/s ~ 50.000Hz/s	1.00Hz/s	○
P4-13	AI curve 1 minimum input	0.00V ~ P4-15	0.00V	○
P4-14	AI curve 1 minimum input corresponding setting	-100.0% ~ +100.0%	0.0%	○
P4-15	AI curve 1 maximum input	P4-13 ~ +10.00V	10.00V	○
P4-16	AI curve 1 maximum input corresponding setting	-100.0% ~ +100.0%	100.0%	○
P4-17	AI1 filter time	0.00s ~ 10.00s	0.10s	○
P4-18	AI curve 2 minimum input	0.00V ~ P4-20	0.00V	○
P4-19	AI curve 2 minimum input corresponding setting	-100.0% ~ +100.0%	0.0%	○
P4-20	AI curve 2 maximum input	P4-18 ~ +10.00V	10.00V	○
P4-21	AI curve 2 maximum input corresponding setting	-100.0% ~ +100.0%	100.0%	○
P4-22	AI2 filter time	0.00s ~ 10.00s	0.10s	○
P4-23	AI curve 3 minimum input	-10.00V ~ P4-25	-10.00V	○
P4-24	AI curve 3 minimum input corresponding setting	-100.0% ~ +100.0%	0.0%	○
P4-25	AI curve 3 maximum input	P4-23 ~ +10.00V	10.00V	○
P4-26	AI curve 3 maximum input corresponding setting	-100.0% ~ +100.0%	100.0%	○

Function code	Name	Detailed instruction	Factory default	Modify
P4-27	Keypad potentiometer input filter time	0.00s ~ 10.00s	0.10s	○
P4-28	HDI minimum input	0.00kHz ~ P4-30	0.00kHz	○
P4-29	HDI minimum input corresponding setting	-100.0% ~ 100.0%	0.0%	○
P4-30	HDI maximum input	P4-28 ~ 100.00kHz	50.00kHz	○
P4-31	HDI maximum input corresponding setting	-100.0% ~ 100.0%	100.0%	○
P4-32	HDI filter time	0.00s ~ 10.00s	0.10s	○
P4-33	AI curve selection	Units place: AI1 1: Curve 1 (see P4-13 ~ P4-16) 2: Curve 2 (see P4-18 ~ P4-21) 3: Curve 3 (see P4-23 ~ P4-26) Tens place: AI2, ibid	321	○
P4-34	AI below minimum input setting selection	Units place: AI1 0: Correspond to minimum input setting 1: 0.0% Tens place: AI2, ibid Hundreds place: Keypad potentiometer, ibid	000	○
P4-35	D1 delay time	0.0s ~ 3600.0s	0.0s	◎
P4-36	D2 delay time	0.0s ~ 3600.0s	0.0s	◎
P4-37	D3 delay time	0.0s ~ 3600.0s	0.0s	◎
P4-38	DI terminal valid mode selection 1	0: Active-high 1: Active-low Units place: D1 Tens place: D2 Hundreds place: D3 Thousands place: D4 Ten thousands place: D5	00000	◎
P4-39	DI terminal valid mode selection 2	0: Active-high 1: Active-low Units place: D6 Tens place: HDI	00	◎
P5 Group: Output Terminal				
P5-00	HDO terminal output mode selection	0: High speed pulse output 1: Open collector output	0	○
P5-01	HDO open collector output selection	0: No output 1: Inverter is running	0	○

Function code	Name	Detailed instruction	Factory default	Modify
P5-02	Relay T1 output selection	2: Fault output (fault stop) 3: FDT1 output 4: Frequency arrival 5: Zero-speed running (no output when stop) 6: Motor overload pre-alarm 7: Inverter overload pre-alarm 8: Setting count value arrival 9: Designated count value arrival 10: Length arrival 11: PLC loop completed 12: Accumulated running time arrival 13: Frequency limiting 14: Torque limiting 15: Ready for running 16: AI1>AI2 17: Frequency upper limit arrival 18: Frequency lower limit arrival 19: Under voltage status output 20: Communication setting 21: Orientation finished (reserved) 22: Orientation approach (reserved) 23: Zero-speed running 2 (output when stop) 24: Accumulated power-on time arrival 25: FDT2 output 26: Frequency 1 arrival output 27: Frequency 2 arrival output 28: Current 1 arrival output 29: Current 2 arrival output 30: Timing arrival output 31: AI1 input over limit 32: Off load 33: Reverse running 34: Zero-current status 35: Module temperature arrival 36: Output current over limit 37: Lower limit frequency arrival (output when stop) 38: Warning output (keep running) 39: Motor over temperature pre-alarm 40: This running time arrival 41: Reserved	2	○
P5-03	Relay T2 output selection		0	○

Function code	Name	Detailed instruction	Factory default	Modify
		42: Auxiliary pump 1 output 43: Auxiliary pump 2 output 44: Auxiliary pump 3 output		
P5-04 ~ P5-05	Reserved			●
P5-06	HDO function selection	0: Running frequency 1: Setting frequency 2: Output current 3: Output torque 4: Output power 5: Output voltage 6: Pulse input 7: AI1 8: AI2 9: Reserved 10: Length 11: Count value 12: Communication 13: Motor speed 14: Output current (100.0% corresponds to 1000.0A) 15: Output voltage (100.0% corresponds to 1000.0V) 16: Reserved	0	○
P5-07	AO1 output function selection		0	○
P5-08	AO2 output function selection		0	○
P5-09	HDO output maximum frequency	0.01kHz ~ 100.00kHz	50.00kHz	○
P5-10	AO1 offset coefficient	-100.0% ~ +100.0%	0.0%	○
P5-11	AO1 gain	-10.00 ~ +10.00	1.00	○
P5-12	AO2 offset coefficient	-100.0% ~ +100.0%	0.0%	○
P5-13	AO2 gain	-10.00 ~ +10.00	1.00	○
P5-17	HDO open collector output delay time	0.0s ~ 3600.0s	0.0s	○
P5-18	Relay 1 output delay time	0.0s ~ 3600.0s	0.0s	○
P5-19	Relay 2 output delay time	0.0s ~ 3600.0s	0.0s	○
P5-20 ~ P5-21	Reserved			●
P5-22	Output terminal valid status selection	0: Positive logic 1: Negative logic Units place: HDO	000	○

Function code	Name	Detailed instruction	Factory default	Modify
		Tens place: Relay1 Hundreds place: Relay 2		
P6 Group: Start and Stop Control				
P6-00	Start mode	0: Direct start 1: Speed tracking and restart 2: Pre-excitation start	0	○
P6-01	VF 0Hz output mode	0: No output 1: With output	0	○
P6-02	Overmodulation selection	Units place: Overmodulation option 0: Disable 1: Enable Tens place: Deep overmodulation option 0: Disable 1: Enable	01	○
P6-03	Start frequency	0.00Hz ~ 10.00Hz	0.00Hz	○
P6-04	Start frequency holding time	0.0s ~ 100.0s	0.0s	◎
P6-05	DC braking current before start/pre-excitation current	0% ~ 100%	0%	◎
P6-06	DC braking time before start/pre-excitation time	0.0s ~ 100.0s	0.0s	◎
P6-07	ACC/DEC mode	0: Linear ACC/DEC 1: S-curve ACC/DEC A 2: S-curve ACC/DEC B	0	◎
P6-08	Time of S curve's start part	0.0% ~ (100.0% ~ P6-09)	30.0%	◎
P6-09	Time of S curve's end part	0.0% ~ (100.0% ~ P6-08)	30.0%	◎
P6-10	Stop mode	0: Deceleration to stop 1: Coast to stop	0	○
P6-11	DC braking start frequency after stop	0.00Hz ~ P0-10 (maximum frequency)	0.00Hz	○
P6-12	DC braking delay time after stop	0.0s ~ 100.0s	0.0s	○
P6-13	DC braking current after stop	0% ~ 100%	0%	○
P6-14	DC braking time after stop	0.0s ~ 100.0s	0.0s	○
P6-15	Braking usage ratio	0% ~ 100%	100%	○
P7 Group: Keypad and Display				

Function code	Name	Detailed instruction	Factory default	Modify
P7-00	Reserved		Model depend	●
P7-01	QUICK/JOG function selection	0: Invalid 1: Switching between keypad command and remote command (terminal command and communication command) 2: FDW/REV Switching 3: Forward Jog 4: Reverse Jog	0	◎
P7-02	STOP/RST function selection	0: Valid when keypad control 1: Always valid	1	○
P7-03	Running status display 1	0000 ~ FFFF Bit00: Running frequency 1 (Hz) Bit01: Setting frequency (Hz) Bit02: Bus voltage (V) Bit03: Output voltage (V) Bit04: Output current (A) Bit05: Output power (kW) Bit06: Output torque (%) Bit07: DI status Bit08: DO status Bit09: AI1 voltage (V) Bit10: AI2 voltage (V) Bit11: Radiator temperature Bit12: Count value Bit13: Length value Bit14: Load speed display Bit15: PID setting	81F	○
P7-04	Running status display 2	0000 ~ FFFF Bit00: PID feedback Bit01: PLC step Bit02: HDI input pulse frequency (kHz) Bit03: Running frequency 2 (Hz) Bit04: Remain running time Bit05: AI1 voltage before calibration (V) Bit06: AI2 voltage before calibration (V) Bit07: Reserved Bit08: Linear speed Bit09: Current power-on time (Hour) Bit10: Current running time (Min) Bit11: HDI input pulse frequency (Hz) Bit12: Communication setting value	0	○

Function code	Name	Detailed instruction	Factory default	Modify
		Bit13: Reserved Bit14: Main frequency A display (Hz) Bit15: Auxiliary frequency B display (Hz)		
P7-05	Stop status display	0000 ~ FFFF Bit00: Setting frequency (Hz) Bit01: Bus voltage (V) Bit02: DI input status Bit03: DO output status Bit04: AI1 voltage(V) Bit05: AI2 voltage(V) Bit06: Radiator temperature Bit07: Count value Bit08: Length value Bit09: PLC step Bit10: Load speed Bit11: PID setting Bit12: HDI input pulse frequency (kHz)	73	○
P7-06	Load speed display coefficient	0.0001 ~ 6.5000	3.0000	○
P7-07	IGBT module temperature	0.0℃~ 100.0℃	-	●
P7-08	Inverter rated voltage	1V~2000V	Model depend	●
P7-09	Accumulated running time	0h ~ 65535h	-	●
P7-10	Model No.	-	-	●
P7-11	Software version No.	-	-	●
P7-12	Load speed display decimal place	0: 0 decimal place 1: 1 decimal place 2: 2 decimal places 3: 3 decimal places	1	○
P7-13	Accumulated Power-on time	0h ~ 65535h	-	●
P7-14	Accumulated power consumption	0kW ~ 65535 kW	-	●
P8 Group: Enhanced Function				
P8-00	Jog running frequency	0.00Hz ~ P0-10 (max. frequency)	2.00Hz	○
P8-01	Jog acceleration time	0.1s ~ 3600.0s	20.0s	○
P8-02	Jog deceleration time	0.1s ~ 3600.0s	20.0s	○

Function code	Name	Detailed instruction	Factory default	Modify
P8-03	Acceleration time 2	0.1s ~ 3600.0s	Model depend	○
P8-04	Deceleration time 2	0.1s ~ 3600.0s	Model depend	○
P8-05	Acceleration time 3	0.1s ~ 3600.0s	Model depend	○
P8-06	Deceleration time 3	0.1s ~ 3600.0s	Model depend	○
P8-07	Acceleration time 4	0.1s ~ 3600.0s	Model depend	○
P8-08	Deceleration time 4	0.1s ~ 3600.0s	Model depend	○
P8-09	Jump frequency 1	0.00Hz ~ P0-10 (maximum frequency)	0.00Hz	○
P8-10	Jump frequency 2	0.00Hz ~ P0-10 (maximum frequency)	0.00Hz	○
P8-11	Jump frequency amplitude	0.00Hz ~ P0-10 (maximum frequency)	0.01Hz	○
P8-12	FWD/REV dead time	0.0s ~ 3600.0s	0.0s	○
P8-13	Reverse control	0: Enable 1: Disable	0	○
P8-14	Action when setting frequency lower than frequency lower limit	0: Running at frequency lower limit 1: Stop 2: Zero-speed running	0	○
P8-15	Droop control	0.00Hz ~ 10.00Hz	0.00Hz	○
P8-16	Reserved			●
P8-17				
P8-18	Power-on running command valid protection selection	0: No protection 1: Protection	0	○
P8-19	Frequency detection value (FDT1)	0.00Hz ~ P0-10 (maximum frequency)	50.00Hz	○
P8-20	Frequency detection lagging value (FDT1)	0.0% ~ 100.0% (FDT1 level)	5.0%	○
P8-21	Frequency arrival detection amplitude	0.0% ~ 100.0% (maximum frequency)	0.0%	○
P8-22	Jump frequency control during ACC/DEC	0: Invalid 1: Valid	0	○
P8-25	Acceleration time 1 and acceleration time 2 switching frequency point	0.00Hz ~ P0-10 (maximum frequency)	0.00Hz	○

Function code	Name	Detailed instruction	Factory default	Modify
P8-26	Deceleration time 1 and deceleration time 2 switching frequency point	0.00Hz ~ P0-10 (maximum frequency)	0.00Hz	○
P8-27	Terminal jog priority	0: Invalid 1: Valid	0	○
P8-28	Frequency detection value (FDT2)	0.00Hz ~ P0-10 (maximum frequency)	50.00Hz	○
P8-29	Frequency detection lagging value (FDT2)	0.0% ~ 100.0% (FDT2 level)	5.0%	○
P8-30	Any arrival frequency detection value 1	0.00Hz ~ P0-10 (maximum frequency)	50.00Hz	○
P8-31	Any arrival frequency detection amplitude 1	0.0% ~ 100.0% (maximum frequency)	0.0%	○
P8-32	Any arrival frequency detection value 2	0.00Hz ~ P0-10 (maximum frequency)	50.00Hz	○
P8-33	Any arrival frequency detection amplitude 2	0.0% ~ 100.0% (maximum frequency)	0.0%	○
P8-34	Zero-current detection level	0.0% ~ 300.0% 100.0% corresponds to motor rated current	5.0%	○
P8-35	Zero-current detection delay time	0.01s ~ 360.00s	0.10s	○
P8-36	Output current over limit value	0.0% (No detection) 0.1% ~ 300.0% (motor rated current)	200.0%	○
P8-37	Output current over limit detection delay time	0.00s ~ 360.00s	0.00s	○
P8-38	Any arrival current 1	0.0% ~ 300.0% (motor rated current)	100.0%	○
P8-39	Any arrival current 1 amplitude	0.0% ~ 300.0% (motor rated current)	0.0%	○
P8-40	Any arrival current 2	0.0% ~ 300.0% (motor rated current)	100.0%	○
P8-41	Any arrival current 2 amplitude	0.0% ~ 300.0% (motor rated current)	0.0%	○
P8-42	Timing function selection	0: Invalid 1: Valid	0	○
P8-43	Timing running time selection	0：P8-44 1：AI1 2：AI2 3：Keypad potentiometer Analog input scale corresponds to P8-44	0	○
P8-44	Timing running time	0.0Min ~ 3600.0Min	0.0Min	○

Function code	Name	Detailed instruction	Factory default	Modify
P8-45	AI1 input voltage protection lower limit	0.00V ~ P8-46	3.10V	○
P8-46	AI1 input voltage protection upper limit	P8-45 ~ 10.00V	6.80V	○
P8-47	Module temperature arrival	0℃ ~ 100℃	75℃	○
P8-48	Cooling fan control	0: Fan runs when inverter running 1: Fan always runs	0	○
P8-49	Wake up frequency	0.0 ~ PA-04 (PID given feedback range)	0.0	○
P8-50	Wake up delay time	0.0s ~ 3600.0s	0.0s	○
P8-51	Dormancy frequency	0.00Hz ~ P0-10 (maximum frequency)	0.00Hz	○
P8-52	Dormancy delay time	0.0s ~ 3600.0s	0.0s	○
P8-53	Running arrival time setting	0.0Min ~ 3600.0Min	0.0Min	○
P9 Group: Fault and Protection				
P9-00	Motor overload protection selection	0: Disable 1: Enable	1	○
P9-01	Motor overload protection gain	0.20 ~ 10.00	1.00	○
P9-02	Motor overload pre-alarm coefficient	50% ~ 100%	80%	○
P9-03	Stall over-voltage gain	0 ~ 100	0	○
P9-04	Stall over-voltage point / Braking threshold	120% ~ 150%	130%	○
P9-05	Stall over current gain	1 ~ 100	20	○
P9-06	Stall over-current point	100% ~ 200%	160%	○
P9-07	Short-circuit to ground protection selection when power-on	0: Invalid 1: Valid	1	○
P9-08	Reserved			○
P9-09	Fault auto reset times	0 ~ 5	0	○
P9-10	Fault HDO acts selection in fault auto reset	0: No action 1: Action	0	○
P9-11	Fault auto reset interval	0.1s ~ 100.0s	1.0s	○
P9-12	Input phase failure protection selection	0: Disable 1: Enable	1	○
P9-13	Output phase failure	0: Disable	1	○

Function code	Name	Detailed instruction	Factory default	Modify
	protection selection	1: Enable		
P9-14	The first fault type	0: No fault 1: Reserved 2: Acc over current 3: Dec over current 4: Over current in constant speed 5: Over voltage in Acc process 6: Over voltage in Dec process 7: Over voltage in constant speed 8: Reserved 9: Under voltage 10: Inverter overload 11: Motor overload 12: Input side phase failure 13: Output side phase failure 14: Module overheat 15: External fault 16: Communication fault 17: Contactor fault 18: Current detection fault 19: Motor autotuning fault 20: Reserved 21: Parameter R/W fault 22: Inverter hardware fault 23: Motor short circuit to ground fault 24: Reserved 25: Reserved 26: Running time arrival 27: Customized fault 1 28: Customized fault 2 29: Power-on time arrival 30: Off load 31: PID feedback lost when running 40: Fast current limiting over time 41: Reserved 42: Speed deviation oversize 43: Motor over speed	—	●
P9-15	The second fault type		—	●
P9-16	The third (latest) fault type		—	●
P9-17	Frequency at the third (latest) fault	—	—	●

Function code	Name	Detailed instruction	Factory default	Modify
P9-18	Current at the third (latest) fault	—	—	●
P9-19	Bus voltage at the third (latest) fault	—	—	●
P9-20	Input terminal's status at the third (latest) fault	—	—	●
P9-21	Output terminal's status at the third (latest) fault	—	—	●
P9-22	Inverter status at the third (latest) fault	—	—	●
P9-23	Power-on time at the third (latest) fault	—	—	●
P9-24	Running time at the third (latest) fault	—	—	●
P9-27	Frequency at the second fault	—	—	●
P9-28	Current at the second fault	—	—	●
P9-29	Bus voltage at the second fault	—	—	●
P9-30	Input terminal's status at the second fault	—	—	●
P9-31	Output terminal's status at the second fault	—	—	●
P9-32	Inverter status at the second fault	—	—	●
P9-33	Power-on time at the second fault	—	—	●
P9-34	Running time at the second fault	—	—	●
P9-37	Frequency at the first fault	—	—	●
P9-38	Current at the first fault	—	—	●
P9-39	Bus voltage at the first fault	—	—	●
P9-40	Input terminal's status at the first fault	—	—	●
P9-41	Output terminal's status at the first fault	—	—	●
P9-42	Inverter status at the first fault	—	—	●
P9-43	Power-on time at the first fault	—	—	●

Function code	Name	Detailed instruction	Factory default	Modify
P9-44	Running time at the first fault	—	—	●
P9-47	Action selection 1 for fault protection	Units place: Motor overload (11) 0: Coast to stop 1: Dec-to-stop 2: Keep running Tens place: Input phase failure (12) Hundreds place: Output phase failure (13) Thousands place: External fault (15) Ten thousands place: communication fault (16)	00000	○
P9-48	Fault protection action selection 2	Units place: Encoder/PG card fault 0: Coast to stop Tens place: Function code R/W fault 0: Coast to stop 1: Dec-to-stop Hundreds place: Reserved Thousands place: Motor over heat (25) Ten thousands: Running time arrival (26)	00000	○
P9-49	Fault protection action selection 3	Units place: Customized fault 1 (27) 0: Coast to stop 1: Dec-to-stop 2: Keep running Tens place: Customized fault 2 (28) 0: Coast to stop 1: Dec-to-stop 2: Keep running Hundreds place: Power-on time arrival time (29) 0: Coast to stop 1: Dec-to-stop 2: Keep running Thousands place: Off load (30) 0: Coast to stop 1: Dec-to-stop 2: Decelerate to 7% of motor rated power, then keep running; run at setting frequency when no off-load Ten thousands place: PID feedback lost when running (31) 0: Coast to stop	00000	○

Function code	Name	Detailed instruction	Factory default	Modify
		1: Dec-to-stop 2: Keep running		
P9-50	Fault protection action selection 4	Units place: Speed deviation oversize (42) 0: Coast to stop 1: Dec-to-stop 2: Keep running Tens place: motor over speed (43) Hundreds place: Initial place fault (51)	00000	○
P9-54	Running frequency selection when fault	0: Run at current running frequency 1: Run at setting frequency 2: Run at upper limit frequency 3: Run at lower limit frequency 4: Run at abnormal backup frequency	0	○
P9-55	Abnormal backup frequency	60.0% ~ 100.0% (100.0% corresponds to maximum frequency(P0-10))	100.0%	○
P9-56 ～ P9-58	Reserved			●
P9-59	Instantaneous power-off action selection	0: Invalid 1: Deceleration 2: Dec-to-stop	0	○
P9-60	Recover judgment voltage when Instantaneous power-off	80 ~ 100.0%	90.0%	○
P9-61	Recover judgment time when Instantaneous power-off	0.00s ~ 100.00s	0.50s	○
P9-62	Action judgment voltage when instantaneous power-off	60.0% ~ 100.0% (standard bus voltage)	80.0%	○
P9-63	Off-load protection selection	0: Disable 1: Enable	0	○
P9-64	Off-load detection level	0.0 ~ 100.0%	10.0%	○
P9-65	Off-load detection time	0.0 ~ 60.0s	1.0s	○
PA Group: PID Function				
PA-00	PID given source	0: PA-01 1: AI1 2: AI2 3: Keypad potentiometer 4: High speed pulse HDI	0	○

Function code	Name	Detailed instruction	Factory default	Modify
		5: Communication 6: Multi-step command		
PA-01	PID given through keypad	0.0 ~ PA-04 (PID given feedback range)	0.0	○
PA-02	PID feedback source	0: AI1 1: AI2 2: Keypad potentiometer 3: AI1-AI2 4: High speed pulse HDI 5: Communication 6: AI1+AI2 7: MAX (|AI1|, |AI2|) 8: MIN (|AI1|, |AI2|)	0	○
PA-03	PID action direction	0: Positive 1: Negative	0	○
PA-04	PID given feedback range	PA-01(PID given through keypad)~ 1000.0	100.0	○
PA-05	Proportional gain Kp1	0.0 ~ 100.0	20.0	○
PA-06	Integration time Ti1	0.01s ~ 10.00s	2.00s	○
PA-07	Differential time Td1	0.000s ~ 10.000s	0.000s	○
PA-08	Cutoff frequency of PID reverse	0.00 ~ P0-10 (maximum frequency)	0.00Hz	○
PA-09	PID deviation limit	0.0% ~ 100.0%	0.0%	○
PA-10	PID differential amplitude	0.00% ~ 100.00%	0.10%	○
PA-11	PID given filter time	0.00 ~ 650.00s	0.00s	○
PA-12	PID feedback filter time	0.00 ~ 60.00s	0.00s	○
PA-13	PID output filter time	0.00 ~ 60.00s	0.00s	○
PA-14	Sampling period	0.00～65535	2	○
PA-15	Proportional gain Kp2	0.0 ~ 100.0	20.0	○
PA-16	Integration time Ti2	0.01s ~ 10.00s	2.00s	○
PA-17	Differential time Td2	0.000s ~ 10.000s	0.000s	○
PA-18	PID parameter switching condition	0: No switching 1: Switching via terminals 2: Automatic switching according to the deviation	0	○
PA-19	PID parameter switching deviation 1	0.0% ~ PA-20	20.0%	○

Function code	Name	Detailed instruction	Factory default	Modify
PA-20	PID parameter switching deviation 2	PA-19 ~ 100.0%	80.0%	○
PA-21	PID initial value	0.0% ~ 00.0%	0.0%	○
PA-22	PID initial value holding time	0.00 ~ 360.00s	0.00s	○
PA-23	Forward maximum value between two output deviation	0.00% ~ 100.00%	1.00%	○
PA-24	Reverse maximum value between two output deviation	0.00% ~ 100.00%	1.00%	○
PA-25	PID integration attribute	Units place: Integration separate 0: Invalid 1: Valid Tens place: Stop integrating or not after output reach limit 0: Keep integrating 1: Stop integrating	00	○
PA-26	PID feedback lost detection value	0.0%: No judgment for feedback lost 0.1% ~ 100.0%	0.0%	○
PA-27	PID feedback lost detection time	0.0s ~ 20.0s	0.0s	○
PA-28	PID stop calculation	0: No calculation when stop 1: Calculation when stop	1	○
Pb Group: Wobble Frequency, Fixed Length, Counting				
Pb-00	Wobble frequency setting mode	0: Relative to center frequency 1: Relative to maximum frequency	0	○
Pb-01	Wobble frequency amplitude	0.0% ~ 100.0%	0.0%	○
Pb-02	Sudden Jump frequency amplitude	0.0% ~ 50.0%	0.0%	○
Pb-03	Wobble frequency cycle	0.1s ~ 3000.0s	10.0s	○
Pb-04	Triangular wave rise time of wobble frequency	0.1% ~ 100.0%	50.0%	○
Pb-05	Setting length	0m ~ 65535m	1000m	○
Pb-06	Actual length	0m ~ 65535m	0m	○
Pb-07	Number of pulses per meter	0.1 ~ 6553.5	100.0	○
Pb-08	Setting count value	1 ~ 65535	1000	○
Pb-09	Designated count value	1 ~ 65535	1000	○

Function code	Name	Detailed instruction	Factory default	Modify
PC Group: Multi-step Command and Simple PLC				
PC-00	Multi-step command 0	-100.0% ~ 100.0%	0.0%	○
PC-01	Multi-step command 1	-100.0% ~ 100.0%	0.0%	○
PC-02	Multi-step command 2	-100.0% ~ 100.0%	0.0%	○
PC-03	Multi-step command 3	-100.0% ~ 100.0%	0.0%	○
PC-04	Multi-step command 4	-100.0% ~ 100.0%	0.0%	○
PC-05	Multi-step command 5	-100.0% ~ 100.0%	0.0%	○
PC-06	Multi-step command 6	-100.0% ~ 100.0%	0.0%	○
PC-07	Multi-step command 7	-100.0% ~ 100.0%	0.0%	○
PC-08	Multi-step command 8	-100.0% ~ 100.0%	0.0%	○
PC-09	Multi-step command 9	-100.0% ~ 100.0%	0.0%	○
PC-10	Multi-step command 10	-100.0% ~ 100.0%	0.0%	○
PC-11	Multi-step command 11	-100.0% ~ 100.0%	0.0%	○
PC-12	Multi-step command 12	-100.0% ~ 100.0%	0.0%	○
PC-13	Multi-step command 13	-100.0% ~ 100.0%	0.0%	○
PC-14	Multi-step command 14	-100.0% ~ 100.0%	0.0%	○
PC-15	Multi-step command 15	-100.0% ~ 100.0%	0.0%	○
PC-16	Simple PLC running mode	0: Stop after one cycle 1: Keep last frequency after one cycle 2: Circular running	0	○
PC-17	Simple PLC storage selection when power-down	Units place: Storage selection when power-off 0: Not store 1: Store Tens place: Storage selection when stop 0: Not store 1: Store	00	○
PC-18	0th phase running time	0.0s (m) ~ 6500.0s (m)	0.0s (m)	○
PC-19	0th phase ACC/DCC time selection	0 ~ 3	0	○
PC-20	1st phase running time	0.0s (m) ~ 6500.0s (m)	0.0s (m)	○
PC-21	1st phase ACC/DCC time selection	0 ~ 3	0	○
PC-22	2nd phase running time	0.0s (m) ~ 6500.0s (m)	0.0s (m)	○

Function code	Name	Detailed instruction	Factory default	Modify
PC-23	2nd phase ACC/DCC time selection	0 ~ 3	0	○
PC-24	3rd phase running time	0.0s (m) ~ 6500.0s (m)	0.0s (m)	○
PC-25	3rd phase ACC/DCC time selection	0 ~ 3	0	○
PC-26	4th phase running time	0.0s (m) ~ 6500.0s (m)	0.0s (m)	○
PC-27	4th phase ACC/DCC time selection	0 ~ 3	0	○
PC-28	5th phase running time	0.0s (m) ~ 6500.0s (m)	0.0s (m)	○
PC-29	5th phase ACC/DCC time selection	0 ~ 3	0	○
PC-30	6th phase running time	0.0s (m) ~ 6500.0s (m)	0.0s (m)	○
PC-31	6th phase ACC/DCC time selection	0 ~ 3	0	○
PC-32	7th phase running time	0.0s (m) ~ 6500.0s (m)	0.0s (m)	○
PC-33	7th phase ACC/DCC time selection	0 ~ 3	0	○
PC-34	8th phase running time	0.0s (m) ~ 6500.0s (m)	0.0s (m)	○
PC-35	8th phase ACC/DCC time selection	0 ~ 3	0	○
PC-36	9th phase running time	0.0s (m) ~ 6500.0s (m)	0.0s (m)	○
PC-37	9th phase ACC/DCC time selection	0 ~ 3	0	○
PC-38	10th phase running time	0.0s (m) ~ 6500.0s (m)	0.0s (m)	○
PC-39	10th phase ACC/DCC time selection	0 ~ 3	0	○
PC-40	11th phase running time	0.0s (m) ~ 6500.0s (m)	0.0s (m)	○
PC-41	11th phase ACC/DCC time selection	0 ~ 3	0	○
PC-42	12th phase running time	0.0s (m) ~ 6500.0s (m)	0.0s (m)	○
PC-43	12th phase ACC/DCC time selection	0 ~ 3	0	○
PC-44	13th phase running time	0.0s (m) ~ 6500.0s (m)	0.0s (m)	○
PC-45	13th phase ACC/DCC time selection	0 ~ 3	0	○
PC-46	14th phase running time	0.0s (m) ~ 6500.0s (m)	0.0s (m)	○
PC-47	14th phase ACC/DCC time selection	0 ~ 3	0	○

Function code	Name	Detailed instruction	Factory default	Modify
PC-48	15th phase running time	0.0s (m) ~ 6500.0s (m)	0.0s (m)	○
PC-49	15th phase ACC/DCC time selection	0 ~ 3	0	○
PC-50	Timing unit (Simple PLC mode)	0: s (second) 1: h (hour)	0	○
PC-51	Multi-step command 0 given mode	0: PC-00 1: AI1 2: AI2 3: Keypad potentiometer 4: High speed pulse HDI 5: PID control 6: Keypad setting frequency (P0-08), can be modified via UP/DN	0	○
Pd Group: Communication Parameters				
Pd-00	Baud rate	0: 300BPS 1: 600BPS 2: 1200BPS 3: 2400BPS 4: 4800BPS 5: 9600BPS 6: 19200BPS 7: 38400BPS	5	○
Pd-01	Data format	0: No parity check (8-N-2) 1: Even parity check (8-E-1) 2: Odd parity check (8-O-1) 3: No parity check (8-N-1)	0	○
Pd-02	Local address	0 ~ 247, 0 is broadcast address	1	○
Pd-03	Response delay	0ms ~ 20ms	2	○
Pd-04	Communication timeout time	0.0 (invalid) 0.1s ~ 60.0s	0.0	○
Pd-05	Communication protocol selection	0: Non-standard MODBUS protocol 1: Standard MODBUS protocol	1	○
Pd-06	Communication selection	Units place: Current resolution 0: 0.01A 1: 0.1A Tens place Writing selection 0: Reply 1: No reply	00	○
PE Group: Reserved Function				
PE-00	Reserved			○

Function code	Name	Detailed instruction	Factory default	Modify
PP Group: Function Code Management				
PP-00	User password	0 ~ 65535	0	○
PP-01	Parameter initialization	0: No action 1: Restore factory default, but not including motor parameters 2: Clear the record	0	◎
PP-02	Function parameter group display selection	Units place: U0 group display selection 0: No display 1: Display Tens place: A0 group display selection 0: No display 1: Display	00	◎
PP-03	Reserved			●
PP-04	Function code modification attribute	0: Disable 1: Enable	0	○
A0 Group: Torque Control Parameters				
A0-00	Speed/torque control mode selection	0: Speed control 1: Torque control	0	◎
A0-01	Torque setting source selection in torque control mode	0: Keypad (A0-03) 1: AI1 2: AI2 3: Keypad potentiometer 4: High speed pulse HDI 5: Communication 6: Min (AI1,AI2) 7: Max (AI1,AI2)	0	◎
A0-03	Torque setting throught keypad in torque control mode	-200.0% ~ 200.0%	150.0%	○
A0-04	Torque filter time	0.00s ~ 10.00s	0.00s	○
A0-05	Forward maximum frequency in torque control mode	0.00Hz ~ P0-10 (maximum frequency)	50.00Hz	○
A0-06	Reverse maximum frequency in torque control mode	0.00Hz ~ P0-10 (maximum frequency)	50.00Hz	○
A0-07	Acc time in torque control mode	0.00s ~ 36000s	0.00s	○
A0-08	Dec time in torque control mode	0.00s ~ 36000s	0.00s	○
A9 Group: Special Function				

Function code	Name	Detailed instruction	Factory default	Modify
A9-00	Water supply function	0: Disable 1: Enable	0	◎
A9-01	Auxiliary pump 1	0: Disable 1: Enable	0	◎
A9-02	Auxiliary pump 1 Start and stop delay	0.0～3600.0S	0	○
A9-03	Auxiliary pump 2	0: Disable 1: Enable	0	◎
A9-04	Auxiliary pump 2 Start and stop delay	0.0～3600.0S	0	○
A9-05	Auxiliary pump 3	0: Disable 1: Enable	0	◎
A9-06	Auxiliary pump 3 Start and stop delay	0.0～3600.0S	0	○
A9-07	Double-speed over-current stall action current compensation coefficient	40%～200%	40%	◎
A9-08	PID double-speed coefficient	1～200	1	○
A9-09	AO1 output analog signal selection	0：0-10V 1：4-20mA	0	◎
A9-10	AO2 output analog signal selection	0：0-10V 1：4-20mA	0	◎

5.2 Monitoring Parameter Table

Function code	Name	Minimum unit
U0:Group Basic Monitoring Parameter		
U0-00	Running frequency (Hz)	0.01Hz
U0-01	Setting frequency (Hz)	0.01Hz
U0-02	DC bus voltage (V)	0.1V
U0-03	Output voltage (V)	1V
U0-04	Output current (A)	0.01A
U0-05	Output power (kW)	0.1kW
U0-06	Output torque (%)	0.1%
U0-07	DI input status	1
U0-08	DO output status	1

Function code	Name	Minimum unit
U0-09	AI1 voltage (V)	0.01V
U0-10	AI2 voltage (V)	0.01V
U0-11	Radiator temperature	1℃
U0-12	Count value	1
U0-13	Length value	1
U0-14	Load speed	1
U0-15	PID setting	1
U0-16	PID feedback	1
U0-17	PLC phase	1
U0-18	HDI input pulse frequency (Hz)	0.01kHz
U0-19	Feedback speed (unit 0.1Hz)	0.1Hz
U0-20	Remain running time	0.1Min
U0-21	AI1 voltage before calibration	0.001V
U0-22	AI2 voltage before calibration	0.001V
U0-23	Keypad potentiometer voltage before calibration	0.001V
U0-24	linear velocity	1m/Min
U0-25	Current power-on time	1Min
U0-26	Current running time	0.1Min
U0-27	HDI input pulse frequency	1Hz
U0-28	Communication setting value	0.01%
U0-29	Reserved	0.01Hz
U0-30	Main frequency A display	0.01Hz
U0-31	Auxiliary frequency B display	0.01Hz
U0-32	Reserved	1
U0-33	Reserved	0.1°
U0-34	Motor temperature	1℃
U0-35	Target torque (%)	0.1%
U0-36	Reserved	1
U0-37	Power factor angle	0.1°
U0-38	Reserved	1
U0-39	Reserved	1V
U0-40	Reserved	1V
U0-41	DI input status visual display	1

Function code	Name	Minimum unit
U0-42	DO input status visual display	1
U0-43	DI function status display 1 (function 01-function 40)	1
U0-44	DI function status visual display 2 (function 41-function 80)	1
U0-59	Setting frequency (%)	0.01%
U0-60	Running frequency (%)	0.01%
U0-61	Inverter status	1

Chapter 6 Parameter Description

Group P0 Basic Function

P0-00	Inverter model		Factory default	1
	Setting range	1	G model	
		2	P model	

1: G model: Applicable to constant torque load.
2: P model: Applicable to constant power load.

300A/300 series inverter adopts G/P combination mode, the suitable motor power of constant torque load (G model) is one size smaller than fan and pump loads (P model).

P0-01	Control mode		Factory default	0
	Setting range	0	V/F control	
		1	Sensorless vector control	

0: V/F control
It is suitable for general purpose application such as pumps, fans etc. One inverter can drive multiple motors.
1: Sensorless vector control
It is widely used for the application which requires high torque at low speed, high speed accuracy, and quicker dynamic response, such as machine tool, injection molding machine, centrifugal machine and wire-drawing machine, etc.

Note:
The autotuning of motor parameters must be accomplished properly if you use the sensorless vector control. How to autotuning of motor parameters please refer to P4 Group.
In order to achieve better control characteristic, the parameters of vector control (P2 Group) should be adjusted.

P0-02	Running Command source		Factory default	0
	Setting range	0	0: Keypad (LED OFF)	
		1	1: Terminal (LED ON)	
		2	2: Communication (LED flickers)	

Select the input channel for control command. The inverter control commands include start, stop, forward run, reverse run, Jog and so on.

0: Keypad (“LOCAL/REMOT” LED OFF)
Both RUN and STOP/RST keys are used for running command control. If multifunction key QUICK/JOG is set as FWD/REV switching function (P7-01 is set to be 2), it will be used to change the rotating orientation. If multifunction key QUICK/JOG is set as FWD jog (P7-01 is set to be 3) or REV jog (P7-01 is set to be 4), it will be used for jog running.

1: Terminal (“LOCAL/REMOT” LED ON)
The operations, including FWD, REV, JOGF, JOGR, etc. can be controlled by multifunctional input terminals.

2: Communication (“LOCAL/REMOT” LED flickers)
The operation of inverter can be controlled by host through communication.

P0-03	Main frequency source A selection		Factory default	0
	Setting range	0	Keypad (P0-08, UP and DOWN Adjustable, not store when power-off)	
		1	Keypad (P0-08, UP and DOWN Adjustable, store when power-off)	
		2	AI1	
		3	AI2	
		4	Keypad potentiometer	
		5	High speed PULSE (HDI)	
		6	Multi-step speed	
		7	Simple PLC	
		8	PID	
		9	Communication	

0: Keypad (not store)
The initial value is the value of P0-08. The setting frequency value of inverter can be modified through the keys “▲” and “▼” of the keyboard (or UP and DOWN of multifunctional input terminals).
“Not store” means that the setting frequency is recovered to the value of P0-08 in case of inverter power-off.

1: Keypad (store)
The initial value is the value of P0-08.
“Store” means that the setting frequency remains the same as the value before inverter power-off.

2: AI1
3: AI2
The reference frequency is set by analog input. 300A/300 series inverter provides 2 analog input terminals (AI1, AI2). Both of AI1 and AI2 are 0~10V / 0~20mA input terminal.
User can select the corresponding relation between the objective frequency and the input voltage value of AI freely. 300A/300 series inverter provides 3 corresponding relation curves which can be set by users through P4 group function code.

4: Keypad potentiometer
The reference frequency is set by keypad potentiometer.

5: High speed PULSE (HDI)
The reference frequency is set by high speed pulse.
Pulse reference signal specification: the voltage range is 9V to 30V, and the frequency range is 0kHz to

50kHz. Pulse given can only be input from the multifunctional input terminal HDI.

6: Multi-step speed

The reference frequency is determined by P4 and PC groups. The selection of steps is determined by combination of multi-step speed terminals.

7: Simple PLC

User can set reference frequency, hold time, running direction of each step and acceleration/deceleration time between steps. For details, please refer to description of PC group.

8: PID

The reference frequency is the result of PID adjustment. For details, please refer to description of PA group.

9: Communication

The reference frequency is set through RS485. For details, please refer to Modbus protocol in Chapter 9.

P0-04	Auxiliary frequency source B selection		Factory default	0
	Setting range	0	Keypad (P0-08, UP and DOWN Adjustable, non-recorded)	
		1	Keypad (P0-08, UP and DOWN Adjustable, recorded)	
		2	AI1	
		3	AI2	
		4	Keypad potentiometer	
		5	High speed PULSE (HDI)	
		6	Multi-step speed	
		7	Simple PLC	
		8	PID	
		9	Communication	

When the auxiliary frequency source is used as independent frequency reference channel (i.e. frequency source switching from A to B), it is used in the same way as the main frequency source. Please refer to P0-03.

When the auxiliary frequency source is used as combination reference, please note:

1. If the auxiliary frequency source is keypad reference, the frequency (P0-08) is invalid, and it needs to adjust the main reference frequency through the keys "▲" and "▼" of the keyboard (or UP and DOWN of multifunctional input terminals).
2. If the auxiliary frequency source is analog input reference (AI1, AI2) or pulse input reference, 100% of input corresponds to the auxiliary frequency source range (refer to P0-05 and P-06).
3. If the frequency source is pulse input reference, it is similar to the analog input reference.

Note: P0-03 and P0-04 can't be set to be the same value. Otherwise, disorder will occur.

P0-05	Frequency source B reference		Factory default	0
	Setting range	0	Relative to maximum frequency	
		1	Relative to frequency source A	

P0-06	Auxiliary Frequency source B range	Factory default	100%
	Setting range	0% ~ 150%	

When the frequency source selection is frequency combination reference (P0-07 is set to 1 or 3), the two parameters are used to determine the adjustment range of auxiliary frequency source.
P0-05 is used to determine the relative object of that range. If it is relative to maximum frequency A, that range will change with the main frequency A.

P0-07	Frequency source selection		Factory default	00
	Setting range	Units place	Frequency source selection	
		0	Main frequency source A	
		1	Calculation result of frequency A and B (determined by tens place)	
		2	Switching between A and B	
		3	Switching between A and calculation result	
		4	Switching between B and calculation result	
		Tens place	Calculation relationship between frequency A and B	
		0	A + B	
		1	A - B	
		2	Max (A, B)	
		3	Min (A, B)	

Units place: Frequency source selection
0: Main frequency source A
Reference frequency = A
1: Calculation result of frequency A and B
Reference frequency = Calculation result of frequency A and B (determined by tens place)
2: Switching between A and B
If the multifunctional input terminal HDI (P4-0X=18:frequency switching) is invalid, reference frequency = A.
If the multifunctional input terminal HDI (frequency source switching) is valid, reference frequency = B.
3: Switching between A and calculation result
If the multifunctional input terminal HDI (frequency switching) is invalid, reference frequency = A.
If the multifunctional input terminal HDI (frequency switching) is valid, reference frequency = calculation result.
4: Switching between B and calculation result
If the multifunctional input terminal HDI (frequency switching) is invalid, reference frequency = B.
If the multifunctional input terminal HDI (frequency switching) is valid, reference frequency = calculation result.

Tens place: Frequency source main/auxiliary calculation relationship

0: A + B

Reference frequency = A + B, achieving frequency combination given function.

1: A - B

Reference frequency = A - B

2: Max (A, B)

Reference frequency = Max (A, B)

3: Min (A, B)

Reference frequency = Min (A, B)

Note: When the frequency source selection is main/auxiliary calculation, the preset offset frequency can be set via P0-21, which can be added to main/auxiliary calculation result to meet different kinds of demand.

P0-08	Keypad reference frequency	Factory default	50.00Hz
	Setting range	0.00 ~ P0-10 (maximum frequency)	

When the main frequency source is selected as “Keypad” or “Terminals UP/DN”, this function code is the initial value of frequency digital setting of the inverter.

P0-09	Running direction	Factory default	0
	Setting range	0	Direction is forward
		1	Direction is reverse

Through modifying this function code, it can change the rotary direction of the motor without changing motor wiring. It’s equal to adjust any two lines of the motor (U, V and W) and further change the rotary direction of the motor.

Note: If the parameters are restored, the running direction will be back to its original status.

P0-10	Maximum frequency	Factory default	50.00Hz
	Setting range	50.00Hz ~ 300.00Hz	

The maximum output frequency of 300A/300 series inverter is 3000Hz.

When P0-22 is set to 1, frequency resolution is 0.1Hz, P0-10 setting range is 50.0Hz～3000.0Hz;

When P0-22 is set to 2, frequency resolution is 0.01Hz, P0-10 setting range is 50.0Hz～300.0Hz.

P0-11	Frequency source upper limit	Factory default	0
	Setting range	0	P0-12 setting
		1	AI1
		2	AI2
		3	Keypad potentiometer
		4	HDI PULSE
		5	Communication

It is used to define the source of frequency upper limit. The frequency upper limit can be sourced from either digital setting (P0-12) or analog input. When the analog input is used to set the frequency upper limit, 100% of analog input setting is relative to P0-12.

Notice:

Upper frequency limit should exceed than the maximum frequency.

Output frequency should not exceed upper frequency limit.

P0-12	Frequency upper limit	Factory default	50.00Hz
	Setting range	P0-14 (frequency lower limit) ~ P0-10 (maximum frequency)	
P0-13	Frequency upper limit offset	Factory default	0.00Hz
	Setting range	0.00Hz ~ P0-10 (maximum frequency)	

When the frequency source upper limit is analog value or HDI pulse, P0-13 is used as the setting value's offset. The combination of this offset frequency and P0-12 is used as the final setting value of frequency upper limit.

P0-14	Frequency lower limit	Factory default	0.00Hz
	Setting range	0.00Hz ~ P0-12 (frequency upper limit)	

If the reference frequency is lower than frequency lower limit, the inverter can stop, or run with lower limit frequency, or run at zero speed, which is set by P8-14.

P0-15	Carrier frequency	Factory default	Model depend
	Setting range	1.0kHz ~ 16.0kHz	

Carrier frequency will affect the noise of motor and the EMI of inverter.

If the carrier frequency is increased, it will cause better current wave, less harmonic current and lower noise of motor.

Notice:

The factory default is optimal in most cases. Modification of this parameter is not recommended.

If the carrier frequency exceeds the factory default, the inverter must be derated because the higher carrier frequency will cause more switching loss, higher temperature rise of inverter and stronger electromagnetic interference.

If the carrier frequency is lower than the factory default, it is possible to cause less output torque of motor and more harmonic current.

The effect of modifying carrier frequency is as following:

Carrier frequency	Low → High
Motor noise	High → Low
Output current waveform	Poor → Good
Motor temperature rise	High → Low

Inverter temperature rise	Low → High
Leakage current	Small → Big
External radiation interference	Small → Big

P0-16	Carrier frequency adjusting according to temperature	Factory default	1
	Setting range	0: No 1: Yes	

The inverter can automatically adjust the carrier frequency according to its temperature. This function can reduce the possibility of overheat alarm of the inverter.

P0-17	Acceleration time 1	Factory default	Model depend
	Setting range	0.00s ~ 36000s	
P0-18	Deceleration time 1	Factory default	Model depend
	Setting range	0.00s ~ 36000s	

Acceleration time is the time of accelerating from 0Hz to ACC/DEC time reference frequency (P0-25). Deceleration time is the time of decelerating from ACC/DEC time reference frequency (P0-25) to 0Hz. Please refer to following figure.

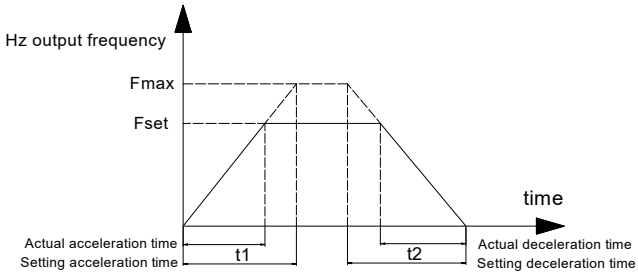

Figure 6-1 ACC/DEC time diagram

There are totally four groups of acceleration/deceleration time which can be selected via the multifunctional digital input terminals.
Group 1: P0-17, P0-18;
Group 2: P8-03, P8-04;
Group 3: P8-05, P8-06;
Group 4: P8-07, P8-08.

P0-19	ACC/DEC time unit		Factory default	1
	Setting range	0	1s	
		1	0.1s	
		2	0.01s	

300A/300 series inverter offers three ACC/DEC time units, they are 1s, 0.1s, 0.01s.

Note: When modifying this function parameter, 4 group ACC/DEC time display decimal place changes, the corresponding ACC/DEC time also changes.

P0-21	Auxiliary frequency source offset frequency when combination	Factory default	0.00Hz
	Setting range	0.00Hz ~ P0-10 (maximum frequency)	

This function code is only valid when frequency source is set to be main/auxiliary calculation.

When frequency source is set to be main/auxiliary calculation, P0-21 is offset frequency, which can be combined with main/auxiliary calculation result setting as reference frequency.

P0-22	Frequency command resolution		Factory default	2
	Setting range	1	0.1Hz	
		2	0.01Hz	

This parameter is used to determine the resolution of all the function codes related to frequency.

When frequency resolution is 0.1Hz, the MAX. output frequency is 3000.0Hz. When frequency resolution is 0.01Hz, the MAX. output frequency is 300.00Hz.

Note: When modifying this parameter, the decimal place of all the parameters related to frequency changes, the corresponding frequency value changes too.

P0-23	Digital setting frequency storage selection when stop		Factory default	1
	Setting range	0	Not store	
		1	store	

This function is only valid when frequency source is set by keypad

0: No store means that the keypad setting frequency value would recover to the value of P0-08 (preset frequency) after the inverter stopped. The frequency modification by keys “▲”, “▼” or terminal UP, DOWN would be cleared.

1: Store means that the keypad setting frequency would recover to the last frequency when inverter stopping. The frequency modification by keys “▲”, “▼” or terminal UP, DOWN is valid.

P0-25	ACC/DEC time reference frequency		Factory default	0
	Setting range	0	P0-10 (maximum frequency)	
		1	Setting frequency	
		2	100Hz	

ACC/DEC time is ACC/DEC time from 0Hz to the frequency set by P0-25, figure 6-1 is ACC/DEC time schematic diagram.

When P0-25 is set to 1, ACC/DEC time is related to setting frequency. The motor acceleration will change if setting frequency changes frequently.

P0-26	Running frequency command UP/DN reference		Factory default	0
	Setting range	0	Running frequency	
		1	Setting frequency	

This parameter is only valid when frequency source is set by keypad.
It is used to confirm which mode would be used to modify setting frequency when keys “▲”, “▼” or terminal UP, DOWN acts, namely, whether reference frequency increases/decreases on the basic of running frequency, or increases/decreases on the basic of setting frequency.

P0-27	Command source combination with frequency source		Factory default	000
	Setting range	Units place	Operation keypad command combination with frequency source	
		0	No combination	
		1	Keypad setting frequency	
		2	AI1	
		3	AI2	
		4	Keypad potentiometer	
		5	High speed pulse HDI	
		6	Multi-step speed	
		7	Simple PLC	
		8	PID	
		9	Communication	
		Tens place	Terminal command combination with frequency source (0 ~ 9, same as units place)	
		Hundreds place	Communication command combination with frequency source (0 ~ 9, same as units place)	

Defining the combination between three running command channels and nine frequency given channels, it’s convenient to achieve synchronous switching.
The meaning of the above frequency given channels is the same as the selection of the main frequency source A (P0-03). Please refer to P0-03.
Different running command channels can bind the same frequency given channel.
When command source binds frequency source & command source is valid, the frequency source set by P0-03 ~ P0-07 is invalid.

Group P1 Motor Parameters

P1-00	Motor type		Factory default	0
	Setting range	0	Common asynchronous motor	
		1	Variable frequency asynchronous motor	
P1-01	Motor rated power		Factory default	Model depend
	Setting range		0.1kW ~ 1000.0kW	
P1-02	Motor rated voltage		Factory default	Model depend
	Setting range		1V ~ 2000V	
P1-03	Motor rated current		Factory default	Model depend
	Setting range		0.01A ~ 655.35A (Inverter power≤55kW) 0.1A ~ 6553.5A (Inverter power＞55kW)	
P1-04	Motor rated frequency		Factory default	Model depend
	Setting range		0.01Hz ~ P0-10 (maximum frequency)	
P1-05	Motor rated speed		Factory default	Model depend
	Setting range		1rpm ~ 65535rpm	

1. Please set the parameters correctly according to the motor nameplate.
2. In order to achieve superior control performance, please perform motor parameters autotuning. The accuracy of autotuning is closely related to the correct setting of the rated motor parameters.

P1-06	Motor stator resistance	Factory default	Model depend
	Setting range	0.001Ω ~ 65.535Ω (Inverter power≤55kW) 0.0001Ω ~ 6.5535Ω (Inverter power＞55kW)	
P1-07	Motor rotor resistance	Factory default	Model depend
	Setting range	0.001Ω ~ 65.535Ω (Inverter power≤55kW) 0.0001Ω ~ 6.5535Ω (Inverter power＞55kW)	
P1-08	Motor leakage inductive	Factory default	Model depend
	Setting range	0.01mH ~ 655.35mH (Inverter power≤55kW) 0.001mH ~ 65.535mH (Inverter power＞55kW)	
P1-09	Motor mutual inductive	Factory default	Model depend
	Setting range	0.1mH ~ 6553.5mH (Inverter power≤55kW) 0.01mH ~ 655.35mH (Inverter power＞55kW)	
P1-10	Motor current without load	Factory default	Model depend
	Setting range	0.01A ~ P1-03 (Inverter power≤55kW) 0.1A ~ P1-03 (Inverter power＞55kW)	

P1-06 ~ P1-10 are motor parameters, which cannot be found on the motor nameplate, and are obtained via the inverter autotuning. The static autotuning only can obtain P1-06 ~ P1-08. The rotation autotuning not only can obtain P1-06 ~ P1-10, but also can get current loop PI parameter, etc.
When P1-01 or P1-02 changed, the inverter will change P1-06 ~ P1-10 automatically, and restore P1-06 ~

P1-10 as standard Y series motor parameters.
If motor parameters autotuning failed in the site, please input the related parameters provided by the motor manufacturer.

P1-11	Motor parameters autotuning		Factory default	0
	Setting range	0	No operation	
		1	Static autotuning	
		2	Rotation autotuning	

0: No operation, prohibit motor parameter autotuning.

1: Motor parameter static autotuning, suitable for the applications which the asynchronous motor is not easy to disconnect with the load, and cannot make rotation autotuning.
Before static autotuning, please set the motor type and motor parameters (P1-00 ~ P1-05) correctly. The inverter can obtain P1-06 ~ P1-08 via static autotuning.
Action description: Set the function code to be 1, the keypad displays “TUNE”, then press RUN key, the inverter will make static autotuning.

2: Motor parameter rotation autotuning
To ensure the dynamic control performance of inverter, please select rotation autotuning. During the rotation autotuning, the motor must be disconnected with the load (i.e. no-load).
During rotation autotuning, the inverter will make static autotuning at first, and then accelerates to 80% motor rated frequency according to acceleration time P0-17, holding for a while, at last decelerates to stop according to deceleration time P0-18 and finish autotuning.
Before rotation autotuning, please set motor type and motor parameters P1-00 ~ P1-05, during rotation autotuning, the inverter can obtain P1-06~P1-10, vector control current loop PI parameters P2-13 ~ P2-16.
Action description: Set the function code to 2, the keypad displays “TUNE”, then press RUN key, the inverter will make rotation autotuning.

Note: Autotuning is valid only on keypad operation mode, cannot make autotuning under terminal and communication operation modes.

Group P2 Vector Control Parameters

Group P2 is valid only for vector control. That is to say, when P0-01= 1, it is valid, and when P0-01=0, it is invalid.

P2-00	Speed loop proportional gain 1	Factory default	30
	Setting range	1 ~ 100	
P2-01	Speed loop integration time 1	Factory default	0.50s
	Setting range	0.01s ~ 10.00s	
P2-02	Low switching frequency	Factory default	5.00Hz
	Setting range	0.00 ~ P2-05	
P2-03	Speed loop proportional gain 2	Factory default	20
	Setting range	1 ~ 100	
P2-04	Speed loop integration time 2	Factory default	1.00s
	Setting range	0.01s ~ 10.00s	
P2-05	High switching frequency	Factory default	10.00Hz
	Setting range	P2-02 ~ P0-10 (maximum frequency)	

P2-00 and P2-01 are PI adjustment parameters when the running frequency is lower than low switching frequency (P2-02). P2-03 and P2-04 are PI adjustment parameters when the running frequency is higher than high switching frequency (P2-05). PI parameter of frequency channel between low switching frequency and high switching frequency is linear switching between two groups of PI parameters, as shown in the figure below:

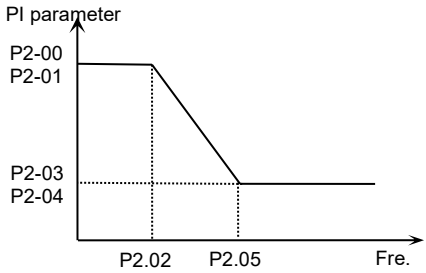

Figure 6-2 PI parameter diagram

The speed dynamic response characteristics of the vector control can be adjusted by setting the proportional coefficient and integration time of the speed regulator.

Increasing the proportional gain or reducing the integration time can accelerate the dynamic response of the speed loop. However, if the proportional gain is too large or the integration time is too short, it will cause the oscillation of the system.

Recommended adjustment method:

If factory default cannot meet the requirements, the relevant parameter values can be subject to fine tuning.

Increase the proportional gain while ensuring no oscillation to the system, and then reduce the integration time to ensure that the system has quick response characteristics and small overshoot.

Caution: Improper PI parameter setting may cause too large speed overshoot. Voltage fault may occur when the overshoot drops.

P2-06	Vector control slip compensation coefficient	Factory default	100%
	Setting range	50% ~ 200%	

For sensorless vector control, this parameter is used to adjust the speed stabilizing precision of the motor. When the speed is too low due to heavy load of motor, this parameter needs to be enlarged, vice versa.

P2-07	Speed loop filter time	Factory default	0.000s
	Setting range	0.000s ~ 0.100s	

Under vector control mode, the output of speed loop regulator is torque current command. This parameter is used to filter the torque command. This parameter needs no adjustment generally and this filter time can be increased in case of huge speed fluctuation. In case of oscillation of motor, this parameter should be reduced properly.

The speed loop filter time is low, and the inverter output torque may fluctuate greatly, but the response is quick.

P2-08	Vector control over excitation gain	Factory default	64
	Setting range	0 ~ 200	

During deceleration, over excitation control can suppress bus voltage increase, avoid over voltage fault. The bigger over excitation gain is, the better the suppression result is.

For the application which over voltage fault happens frequently during deceleration, the over excitation gain needs to be increased. But the current would be increased if the over excitation is too bigger, so you need to set the suitable over excitation gain.

For the small inertia situation, voltage doesn’t increase during motor deceleration, please set over excitation gain to 0. For the application with braking resistor, please also set over excitation gain to 0.

P2-09	Torque upper limit source under speed control mode		Factory default	0
	Setting range	0	P2-10	
		1	AI1	
		2	AI2	
		3	Keypad potentiometer	
		4	High speed pulse HDI	
		5	Communication	
P2-10	Torque upper limit digital setting		Factory default	150.0%
	Setting range	0.0% ~ 200.0%		

In the speed control mode, the maximum of the inverter output torque is controlled by the torque upper limit source.

P2-09 is used to select the setting source of torque upper limit. When setting via the analog value, high speed pulse HDI, communication, 100% of the relevant setting corresponds to P2-10, and 100% of P2-10 is the inverter rated torque.

Group P3 V/F Control Parameters

This group of function code is enabled only for V/F control (P0-01=2) and is invalid for vector control.
V/F control is applicable for the general loads such as fan and pump or the applications where one inverter drives multiple motors or the inverter power is one level lower or higher than the motor power.

P3-00	V/F curve setting		Factory default	0
	Setting range	0	Linear V/F curve	
		1	Multiple-point V/F curve	
		2	Square V/F curve	
		3	1.2 power V/F	
		4	1.4 power V/F	
		6	1.6 power V/F	
		8	1.8 power V/F	

0: Linear V/F curve. It is suitable for common constant torque load.
1: Multiple-point V/F curve. It is suitable for the special loads such as dehydrator and centrifugal machine.
2: Square V/F curve. It is suitable for the centrifugal loads such as fan and pump.
3~8: VF curve between linear VF and square VF.

P3-01	Torque boost	Factory default	Model depend
	Setting range	0.0% ~ 30%	
P3-02	Cut-off frequency of torque boost	Factory default	50.00Hz
	Setting range	0.00Hz ~ P0-10 (maximum frequency)	

To compensate the low frequency torque characteristics of V/F control, it can boost the inverter output voltage during low frequency. If the torque boost is set to too large, the motor may be over heat, and the inverter may be over current.
Adjust this parameter according to the different loads. Increase this parameter for heavy load, reduce it for light load.
When the torque boost is set to 0.0, the inverter will adopt auto torque boost.
Cut-off frequency of torque boost: Under this frequency, the torque boost is valid. If it exceeds this setting frequency, the torque boost is invalid. Refer to Figure 6-3 for details.

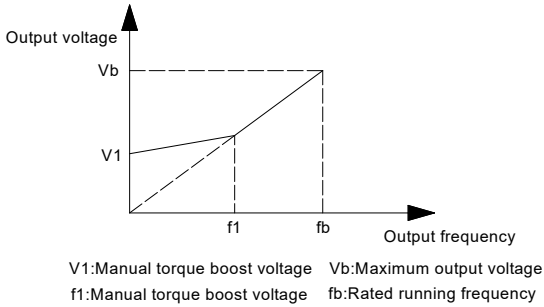

Figure 6-3 Manual torque boost diagram

P3-03	V/F frequency point 1	Factory default	0.00Hz
	Setting range	0.00Hz ~ P3-05	
P3-04	V/F voltage point 1	Factory default	0.0%
	Setting range	0.0% ~ 100.0%	
P3-05	V/F frequency point 2	Factory default	0.00Hz
	Setting range	P3-03 ~ P3-07	
P3-06	V/F voltage point 2	Factory default	0.0%
	Setting range	0.0% ~ 100.0%	
P3-07	V/F frequency point 3	Factory default	0.00Hz
	Setting range	P3-05 ~ P1-04 (motor rated power)	
P3-08	V/F voltage point 3	Factory default	0.0%
	Setting range	0.0% ~ 100.0%	

Multi-step V/F curve is defined by P3-03 to P3-08.

The curve of multi point V/F is generally set according to the load characteristics of the motor.

- Caution: V1<V2<V3 and F1<F2<F3. The voltage corresponding to low frequency should not be set too high, otherwise it may cause motor overheat or inverter fault.

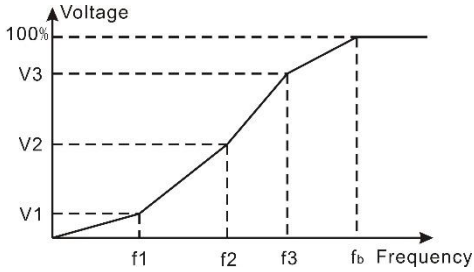

Figure 6-4 V/F curve setting diagram

P3-09	V/F slip compensation gain	Factory default	0.0%
	Setting range	0% ~ 200.0%	

It is valid only for V/F control.
Setting this parameter can compensate the slip of motor speed caused by the load increases, and makes the motor speed stably when the load changes.
V/F slip compensation gain set to 100% means the slip compensation of the motor with rated load is the motor rated slip, which can be calculated according to motor rated power and motor rated speed automatically.
Slip gain adjustment can refer to the following principle: When the load is rated load, the motor speed is basically the same as the target speed. When the values are different, please adjust this gain properly.

P3-10	V/F over-excitation gain	Factory default	64
	Setting range	0 ~ 200	

During deceleration, over excitation control can suppress bus voltage increase, avoid over voltage fault. The bigger over excitation gain is, the better suppression result is.
For the application which over voltage fault happens frequently during deceleration, the over excitation gain needs to be increased. But the current would be increased if the over excitation is too bigger, so you need to set the suitable over excitation gain.
For the small inertia situation, voltage doesn't increase during motor deceleration, please set over excitation gain to 0. For the application with braking resistor, please also set over excitation gain to 0.

P3-11	V/F oscillation suppression gain	Factory default	Model depend
	Setting range	0 ~ 100	

Set the gain as small as possible on the premise that there is effective oscillation suppression measure, which can avoid the affect causing to VF running. Set the gain to 0 when the motor has no oscillation. Only when the motor has obvious oscillation, this gain can be increased properly. The bigger the gain is, the better oscillation suppression result will be.

P3-12	V/F oscillation suppression mode	Factory default	0
	Setting range	0 ~ 1	

When using this function, please make sure the motor rated current and no-load current parameters are accurate, otherwise the V/F oscillation suppression result would be not good.

Group P4 Input Terminal

The standard inverter has 7 multifunctional digital input terminals (HDI can be used as high speed pulse input terminal) and two analog input terminals.

P4-00	D1 terminal function	Factory default	1
P4-01	D2 terminal function	Factory default	2
P4-02	D3 terminal function	Factory default	0
P4-03	D4 terminal function	Factory default	0
P4-04	D5 terminal function	Factory default	0
P4-05	D6 terminal function	Factory default	0
P4-06	HDI terminal function	Factory default	0

These parameters are used to set the functions of the multifunctional digital input terminals.

Setting value	Function	Description
0	No function	The no operation function can be set on the unused terminals so as to prevent error action.
1	Forward (FWD)	Control the inverter forward and reverse via the external terminals.
2	Reverse (REV)	
3	Three-line running control	This terminal is used to confirm that the inverter running mode is three-line control mode. Refer to P4-11 (terminal command mode) for details.
4	Forward Jog (FJOG)	FJOG refers to Jog forward running, RJOG refers to Jog reverse running. Regarding Jog running frequency and Jog ACC/DEC time, please refer to P8-00, P8-01 and P8-02.
5	Reverse Jog (RJOG)	
6	Terminal UP	When the frequency is given by the external terminals, it is used as increment and decrement commands of frequency modification. When the frequency source is set by digital, it can be used to adjust the setting frequency.
7	Terminal DOWN	
8	Coast to stop	The inverter locks the output, and the motor stop process is beyond the inverter control. This mode is the same as the meaning of coast-to-stop as described in F6-10.
9	Fault reset (RESET)	External fault reset function. It is the same as the function of RESET key on the keyboard. Using this function can realize long-distance fault reset.
10	Pause running	The inverter decelerates to stop, but all the running parameters are in the memory status, such as PLC parameter, wobble frequency parameter and PID parameter. After this signal disappears, the inverter restores to the status before stopping.
11	External fault normally open input	After the signal is sent to the inverter, the inverter reports fault E-15 and acts according to the fault protection action mode (see P9-47).
12	Multi-step speed terminal 1	It can realize 16 steps or 16 other command setting through 16 statuses of the four terminals. See attached table 1.
13	Multi-step speed terminal 2	
14	Multi-step speed terminal 3	
15	Multi-step speed	

Setting value	Function	Description
	terminal 4	
16	ACC/DEC time selection terminal 1	It can select four types of ACC/DEC time though 4 statuses of the two terminals. See attached table 2.
17	ACC/DEC time selection terminal 2	
18	Main frequency source switching	Used to switch different frequency source. According to the setting of frequency source selection (P0-07), when setting switching between two frequency sources is frequency source, it can achieve switching two frequency sources via this terminal
19	UP and DOWN setting clear (terminal and keyboard)	When the frequency reference is digital frequency reference, this terminal can be used to clear the frequency value modified by UP/DOWN and thus restore the reference frequency to the setting value of P0-08.
20	Running command switching terminal	When the command source (P0-02) is set to 1, it performs switching between terminal control and keyboard control via this terminal. When the command source (P0-02) is set to 2, it performs switching between communication control and keyboard control via this terminal.
21	ACC/DEC invalid	Protect the inverter from affecting by the external signals (except stop command), and maintain the current frequency.
22	PID Pause	PID is invalid temporarily, and the inverter maintains the current frequency output, no longer adjusts PID of frequency source.
23	PLC status reset	PLC pauses during the execution process. When it runs again, it can restore to the initial status of simple PLC via this terminal.
24	Wobble frequency pause	The inverter outputs the central frequency. Wobble frequency function pauses.
25	Counter input	The input terminal of counting pulse.
26	Counter reset	Clear the counter status.
27	Length count input	Input terminal of length counting.
28	Length reset	Length clear
29	Torque control invalid	Torque control is invalid, the inverter adopts speed control mode.
30	PLUSE frequency input (only valid for HDI)	HDI is pulse input terminal.
31	Reserved	Reserved
32	DC braking command	When this terminal is valid, and the inverter directly switches to DC braking status.
33	External fault normal close input	After the external fault normal close signal is sent to the inverter, the inverter reports fault E-15 and stops.
34	Frequency modification enabled	If this function is valid, the inverter does not response to the frequency changing, until this terminal is invalid
35	PID action direction reverse	When this terminal is valid, PID action direction is the opposite of value set by PA-03.
36	External stop terminal 1	The inverter can be stopped by this terminal under keypad control, which has the same function as STOP key's.
37	Control command switching terminal 2	Used to switch between terminal control and communication control. If command source selection is set to terminal control, then the system switches to communication control when the terminal is valid, vice versa.

Setting value	Function	Description
38	PID integration stop	When this terminal is valid, PID integration adjustment function will stop working, but PID ratio adjustment & differential adjustment function are still valid.
39	Switch frequency source A to preset frequency	When this terminal is valid, frequency source A is replaced by preset frequency (P0-08)
40	Switch frequency source B to preset frequency	When this terminal is valid, frequency source B is replaced by preset frequency (P0-08)
41	Reserved	
42		
43	PID parameter switching	When PID parameter switching condition is DI terminal (PA-18=1) and this terminal is invalid, PID parameter is determined by PA-05 ~ PA-07. When this terminal is valid, PID parameter is determined by PA-15 ~ PA-17
44	Customized fault 1	When customized fault 1 and 2 are valid, the inverter alarms E-27 and E-28, which would be processed according to the action mode set by P9-49.
45	Customized fault 2	
46	Speed control/torque control switching	Make the inverter switches between speed control and torque control mode. When this terminal is invalid, the inverter runs at the mode set by A0-00 (speed/torque control mode), the inverter switches to another mode when the terminal is valid.
47	Emergency stop	When the terminal is valid, the inverter stops with fastest speed, during the process, the current is as upper limits are set. This function applied in the situation which the inverter needs to stop ASAP when the system is in emergency status.
48	External stop terminal 2	In any control mode (Keypad control, terminal control, communication control), the inverter can decelerate to stop via this terminal & the deceleration time is DEC time 4.
49	Deceleration DC braking	When this terminal is valid, the inverter decelerates to the stop DC braking starting frequency, then switches to DC braking status.
50	The running time reset	When the terminal is valid, the inverter will clear the running time to zero, this function need to be used together with timing running (P8-42) and this running time arrival (P8-53).

Attached Table 1 Multi-step Command Function Description

K4	K3	K2	K1	Command setting	Corresponding parameter
OFF	OFF	OFF	OFF	Multi-step command 0	PC-00
OFF	OFF	OFF	ON	Multi-step command 1	PC-01
OFF	OFF	ON	OFF	Multi-step command 2	PC-02
OFF	OFF	ON	ON	Multi-step command 3	PC-03
OFF	ON	OFF	OFF	Multi-step command 4	PC-04
OFF	ON	OFF	ON	Multi-step command 5	PC-05
OFF	ON	ON	OFF	Multi-step command 6	PC-06
OFF	ON	ON	ON	Multi-step command 7	PC-07
ON	OFF	OFF	OFF	Multi-step command 8	PC-08

ON	OFF	OFF	ON	Multi-step command 9	PC-09
ON	OFF	ON	OFF	Multi-step command 10	PC-10
ON	OFF	ON	ON	Multi-step command 11	PC-11
ON	ON	OFF	OFF	Multi-step command 12	PC-12
ON	ON	OFF	ON	Multi-step command 13	PC-13
ON	ON	ON	OFF	Multi-step command 14	PC-14
ON	ON	ON	ON	Multi-step command 15	PC-15

When the frequency source selection is multi-step speed, 100% of PC-00~PC-15 correspond to P0-10 (maximum frequency).
Multi-step command not only can set as multi-step speed, but also can set as PID given source, to meet the requirement of need to switch between different given values.

Attached Table 2 Multi-step Command Speed Function Description

Terminal 2	Terminal 1	Acceleration or deceleration time selection	Corresponding parameter
OFF	OFF	ACC time/DEC time 1	P0-17. P0-18
OFF	ON	ACC time/DEC time 2	P8-03. P8-04
ON	OFF	ACC time/DEC time 3	P8-05. P8-06
ON	ON	ACC time/DEC time 4	P8-07. P8-08

P4-10	Terminal filter time	Factory default	0.010s
	Setting range	0.000s ~ 1.000s	

It is used to set the sensitivity of DI terminal. If the digital input terminal is vulnerable to interferences and may cause error action, it can increase this parameter value to enhance the anti-interference capability. However, this operation will reduce the sensitivity of DI terminal.

P4-11	Terminal command mode		Factory default	0
	Setting range	0	Two-line mode 1	
		1	Two-line mode 2	
		2	Three-line mode 1	
		3	Three-line mode 2	

This parameter defines four different modes of controlling the operation of the inverter via the external terminals.
0: Two-line running mode 1: This is the most common mode. The forward/reverse rotation of the motor is decided by the commands of FWD and REV terminals.

Terminal	Setting value	Description
DI_x	1	Forward running (FWD)
DI_y	2	Reverse running (REV)

K1	K2	Running command
0	0	Stop
0	1	Reverse
1	0	Forward
1	1	Stop

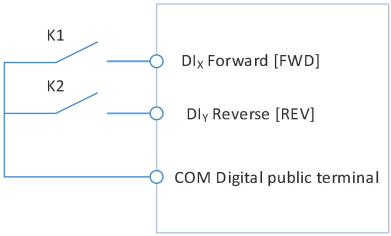

Figure 6-5 Two-line Running Mode 1

1: Two-line running mode 2: When this mode is adopted, REV is enabled terminal. The direction is determined by the status of FWD.

Terminal	Terminal	Description
DI_x	1	Forward running (FWD)
DI_y	2	Forward running (REV)

K1	K2	Running command
0	0	Stop
0	1	Stop
1	0	Forward
1	1	Reverse

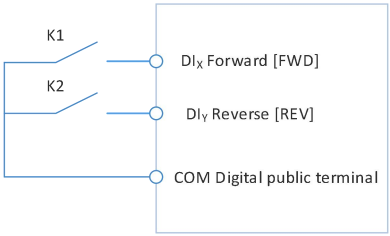

Figure 6-6 Three-line Running Mode 2

2: Three-line running mode 1: In this mode, DI_n is enabled terminal, and the direction is controlled by FWD and REV respectively. However, the pulse is enabled through disconnecting the signal of DI_n terminal when the inverter stops.

Terminal	Setting value	Description
DI_x	1	Forward running (FWD)
DI_y	2	Reverse running (REV)
DI_n	3	Three-line running control

To make the inverter run, users must close DI_n terminal firstly. It can achieve the motor forward or reverse control via pulse rising of DI_x or DI_y.

It can achieve the inverter stop via cutting off DI_n terminal signal. DI_x. DI_y. DI_n are DI1 ~ DI6, HDI multifunctional input terminals, the valid input of DI_x (DI_y) is pulses signal, and the valid input of DI_n is level signal.

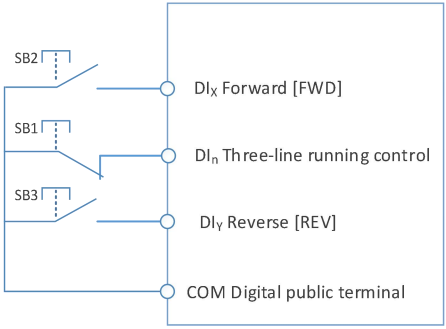

Figure 6-7 Three-line Running Mode 1

Where,
SB1: Stop button
SB2: Forward rotation button
SB3: Reverse rotation button

3: Three-line running mode 2: In this mode, DI_n is enabled terminal, and the running command is given by FWD, while the direction is determined by the status of REV. Stop command is performed through disconnecting the DI_n signal.

Terminal	Setting value	Description
DI_x	1	Forward running (FWD)
DI_y	2	Reverse running (REV)
DI_n	3	Three-line running control

To make the inverter run, users must close DI_n terminal firstly, and then the motor running signal will be generated by DI_x pulse rising edge and the motor direction signal will be generated by D_y status.

It can achieve the inverter stop via cutting off DI_n terminal signal. DI_x. DI_y. DI_n are DI1 ~ DI6, HDI multifunctional input terminals, the valid input of DI_x is pulses signal, and the valid input of DI_n (DI_y) is level signal.

K	Running direction
0	Forward
1	Reverse

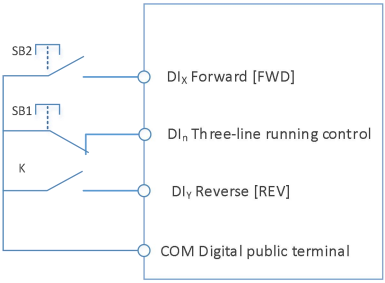

Figure 6-8 Three-line Running Mode 2

Where,
SB1: Stop button
SB2: Running button

P4-12	UP/DN change rate	Factory default	1.00Hz/s
	Setting range	0.001Hz/s ~ 50.000 Hz/s	

Terminals UP/DOWN is used to adjust the change rate when setting frequency.
When P0-22 is set to 2, the range is 0.001~50.000Hz/s.
When P0-22 is set to 1, the range is 0.01~50.00Hz/s.

P4-13	AI curve 1 minimum input	Factory default	0.00V
	Setting range	0.00V ~ P4-15	
P4-14	AI curve 1 minimum input corresponding setting	Factory default	0.0%
	Setting range	-100.00% ~ 100.0%	
P4-15	AI curve 1 maximum input	Factory default	10.00V
	Setting range	P4-13 ~ 10.00V	
P4-16	AI curve 1 maximum input corresponding setting	Factory default	100.0%
	Setting range	-100.00% ~ 100.0%	
P4-17	AI1 filter time	Factory default	0.10s
	Setting range	0.00s ~ 10.00s	

The above function codes define the relationship between the analog input voltage and analog input setting value.
When the analog input voltage is bigger than P4-15 (maximum input of AI curve 1), then calculate the analog voltage according to maximum input. When the analog input voltage is smaller than P4-13 (minimum input of AI curve 1), then calculate the analog voltage with minimum input or 0.0% according to P4-34 (AI below minimum input setting selection).
When the analog input is current input, 1mA current equals to 0.5V voltage.
AI1 input filter time is used to set AI1 software filter time, when the site analog signal can be easily disturbed, please increase filter time to stable the detected analog signal, but the bigger the filter time is, the slower the response speed of the analog detection is . So please set this parameter according to the situation.
In difference applications, 100% of analog input corresponds to different nominal values. Refer to all the application parts for details.
Several setting examples are shown in the following figures:

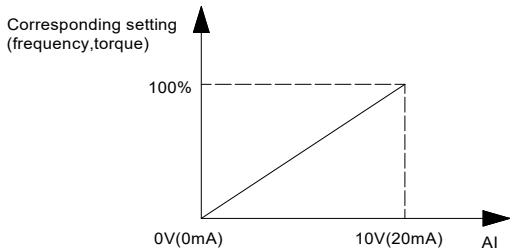

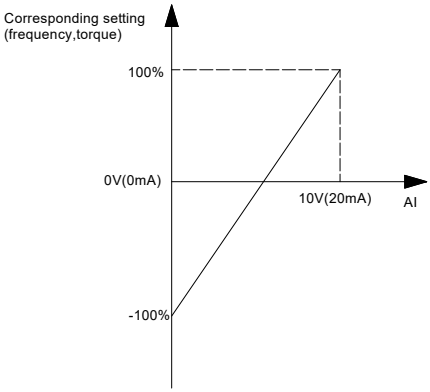

Figure 6-9 Corresponding Relationship between Analog Reference and Setting

P4-18	AI curve 2 minimum input		Factory default	0.00V
	Setting range	0.00V ~ P4-20		
P4-19	AI curve 2 minimum input corresponding setting		Factory default	0.0%
	Setting range	-100.00% ~ 100.0%		
P4-20	AI curve 2 maximum input		Factory default	10.00V
	Setting range	P4-18 ~ 10.00V		
P4-21	AI curve 2 maximum input corresponding setting		Factory default	100.0%
	Setting range	-100.00% ~ 100.0%		
P4-22	AI2 filter time		Factory default	0.10s
	Setting range	0.00s ~ 10.00s		

P4-23	AI curve 3 minimum input		Factory default	0.00V
	Setting range	-10.00V ~ P4-25		
P4-24	AI curve 3 minimum input corresponding setting		Factory default	0.0%
	Setting range	-100.00% ~ 100.0%		
P4-25	AI curve 3 maximum input		Factory default	10.00V
	Setting range	P4-23 ~ 10.00V		
P4-26	AI curve 3 maximum input corresponding setting		Factory default	100.0%
	Setting range	-100.00% ~ 100.0%		
P4-27	Keypad potentiometer input filter time		Factory default	0.10s
	Setting range	0.00s ~ 10.00s		

P4-28	HDI minimum input		Factory default	0.00kHz
	Setting range	0.00kHz ~ P4-30		
P4-29	HDI minimum input corresponding setting		Factory default	0.0%
	Setting range	-100.00% ~ 100.0%		
P4-30	HDI maximum input		Factory default	50.00kHz
	Setting range	P4-28 ~ 100.00kHz		
P4-31	HDI maximum input setting		Factory default	100.0%
	Setting range	-100.00% ~ 100.0%		
P4-32	HDI filter time		Factory default	0.10s
	Setting range	0.00s ~ 10.00s		

This group of function code defines the corresponding relationship when the pulse is used as frequency setting mode.

The pulse frequency input can only be input via HDI channel. The applications of this group function are similar as those of AI curve 1 function.

P4-33	AI curve selection		Factory default	321
	Setting range	Units place	AI1 curve selection	
		1	Curve 1 (see P4-13 ~ P4-16)	
		2	Curve 2 (see P4-18 ~ P4-21)	
		3	Curve 3 (see P4-23 ~ P4-26)	
		Tens place	AI2 curve selection, ibid	

Units place and tens place of this function code are used to select analog input AI1, AI2 corresponding setting curve.

Curve 1, curve 2, curve 3 are 2 points curves, set by P4 group.

Standard inverter has 2 analog input terminals.

P4-34	AI below minimum input setting selection		Factory default	000
	Setting range	Units place	AI1 below minimum input setting selection	
		0	Correspond to minimum input setting	
		1	0.0%	
		Tens place	AI2 below minimum input setting selection (0 ~ 1, ibid)	
		Hundreds place	Keypad potentiometer below minimum input setting selection (0 ~ 1, ibid)	

The parameter is used to set how to confirm the analog corresponding setting when the analog input voltage is lower than the setting “the minimum input”.

Units place, tens place and hundreds place of this function code correspond to the analog input AI1, AI2 and Keypad potentiometer.

If the selection is 0, when AI input is lower than “the minimum input”, the analog value corresponding setting is the curve “the minimum input corresponding setting” (P4-14, P4-19, P4-24) determined by the function code.

If the selection is 1, when AI input is lower than “the minimum input”, the analog value corresponding setting is 0.0%.

P4-35	DI1 delay time		Factory default	0.0s
	Setting range	0.0s ~ 3600.0s		
P4-36	DI2 delay time		Factory default	0.0s
	Setting range	0.0s ~ 3600.0s		
P4-37	DI3 delay time		Factory default	0.0s
	Setting range	0.0s ~ 3600.0s		

Used to set the delay time when DI terminal status changing.
Currently only DI1, DI2, DI3 have setting delay time function.

P4-38	DI terminal valid mode selection 1		Factory default	00000
	Setting range	Units place	DI1 terminal valid status setting	
		0	Active-high	
		1	Active-low	
		Tens place	D2 terminal valid status setting (0 ~ 1, ibid)	
		Hundreds place	D3 terminal valid status setting (0 ~ 1, ibid)	
		Thousands place	D4 terminal valid status setting (0 ~ 1, ibid)	
		Ten thousands place	D5 terminal valid status setting (0 ~ 1, ibid)	
P4-39	DI terminal active mode selection 2		Factory default	00
	Setting range	Units place	D6 terminal valid status setting	
		0	Active-high	
		1	Active-low	
		Tens place	HDI terminal valid status setting (0 ~ 1, ibid)	

They are used to set the digital input terminal active status mode. If the selection is active-high, the relevant DI terminal connects with COM is valid, disconnect invalid. If the selection is active-high, the relevant DI terminal connects with COM is invalid, disconnect valid.

Group P5 Output Terminal

The standard inverter has 2 multifunctional analog output terminals, 2 multifunctional relay output terminals, 1 HDO terminal (can be used as either high-speed pulse output terminal or collector open output).

P5-00	HDO terminal output selection		Factory default	0
	Setting range	0	High speed pulse output	
		1	Open collector output	

HDO terminal is programmable multiplexing terminal, can be used as high-speed pulse output, with maximum frequency 100.00 kHz. Refer to P5-06 for details.

P5-01	HDO open collector output selection	Factory default	0
P5-02	Relay 1 output function selection	Factory default	2
P5-03	Relay 2 output function selection	Factory default	0

The parameters are used to select the functions of 3 digital outputs.
Multifunctional output terminal function selection is as follows:

Setting value	Function	Description
0	No output	The output terminals do not have any functions.
1	Inverter is running	It indicates the inverter is running, and there is output frequency (can be zero), and the inverter outputs ON signal at this time.
2	Fault output (fault stop)	When the inverter is faulty & it stops, it outputs ON signal.
3	FDT1 output	Please refer to P8-19 and P8-20 for details.
4	Frequency arrival	Please refer to P8-21 for details.
5	Zero speed running (no output when stop)	When the inverter is running & the output frequency is 0, it outputs ON signal. When the inverter stopped, the signal is OFF.
6	Motor overload pre-alarm	Judgment will be made according to the pre-warning threshold value before the motor overload protection action. If it exceeds the pre-warning threshold, it will output ON signal. Motor overload parameters are set in P9-00 to P9-02.
7	Inverter overload pre-alarm	The inverter outputs ON signal 10s before overload protection action
8	Setting count value arrival	When the counting value reaches the setting value of PB-08, it outputs ON signal.
9	Designated count value arrival	When the counting value reaches the setting value of PB-09, it outputs ON signal. Refer to Group B function description for the counting function.
10	Length arrival	When the measured actual length exceeds the setting value of PB-05, it outputs ON signal.
11	PLC circulation completion	When the simple PLC has been running for one cycle, it outputs a pulse signal with width of 250ms.
12	Accumulated running time arrival	When the accumulated running time of the inverter exceeds the setting time P8-17, it outputs ON signal.
13	Frequency limiting	When the setting frequency exceeds the frequency upper limit or frequency lower limit, and the output frequency of the inverter reaches the frequency upper limit or frequency lower

Setting value	Function	Description
		limit, it outputs ON signal.
14	Torque limiting	In speed control mode, when the output torque reaches torque limit, the inverter is in stall protection status and outputs ON signal.
15	Ready for running	When the main circuit and control circuit power supply are connected, the inverter protection function is invalid, and the inverter is in running status, it outputs ON signal.
16	AI1>AI2	When analog input AI1 is bigger than AI2, the inverter outputs ON signal.
17	Frequency upper limit arrival	When the running frequency reaches frequency upper limit, it outputs ON signal.
18	Frequency lower limit arrival (no output when stop)	When the running frequency reaches frequency lower limit, it outputs ON signal. The signal is OFF when stop.
19	Under voltage status output	During under voltage, the inverter outputs ON signal.
20	Communication setting	Refer to the communication protocol
21	Reserved	Reserved
22	Reserved	Reserved
23	Zero-speed running 2 (output when stop)	When the output frequency is 0Hz, the inverter outputs ON signal. The signal is still ON when stop.
24	Accumulated power-on time arrival	The accumulated power-on time (P7-13) exceeds the time set by P8-16, the inverter outputs ON signal.
25	FDT2 output	Please refer to P8-28, P8-29 description.
26	Frequency 1 arrival output	Please refer to P8-30, P8-31 description.
27	Frequency 2 arrival output	Please refer to P8-32, P8-33 description.
28	Current 1 arrival output	Please refer to P8-38, P8-39 description.
29	Current 2 arrival output	Please refer to P8-40, P8-41 description.
30	Timing arrival output	When timing function selection (P8-42) is valid, after the running time arrives the set timing, outputs ON signal.
31	AI1 input over limit	When analog input AI1 is bigger than P8-46 (AI1 input protection upper limit) or lower than P8-45 (AI1 input protection lower limit), outputs ON signal.
32	Off load	When inverter is in the off-load state, it outputs ON signal.
33	Reverse running	When reverse running, the inverter outputs ON signal.
34	Zero current status	Please refer to description of P8-34, P8-35.
35	Module temperature arrival	The temperature of converter module radiator (P7-07) reaches the set value of module temperature arrival (P8-47), the inverter outputs ON signal.
36	Output current over limit	Please refer to description of P8-36, P8-37.
37	Lower limit frequency arrival (output when stop)	When running frequency reaches lower limit frequency, outputs ON signal. The signal is still ON when stop.
38	Warning output (keep running)	When a fault happens & the process mode of this fault is keeping running, the inverter outputs warning.
39	Reserved	When motor temperature reaches P9-58 (motor overheating pre alarm threshold), the inverter outputs ON signal. (motor

Setting value	Function	Description
		temperature can be checked via U0-34)
40	This running time arrival	This running time exceeds the time set by P8-53, the inverter outputs ON signal.

P5-06	HDO function selection	Factory default	0
P5-07	AO1 output function selection	Factory default	0
P5-08	AO2 output function selection	Factory default	0

The frequency range of HDO output pulse is 0.01 kHz ~ P5-09 (HDO maximum output frequency), P5-09 can be set between 0.01 kHz ~ 100.00 kHz.
The output range of analog output (AO1 & AO2) is 0V ~ 10V or 4mA ~ 20mA.
The corresponding value range that it indicates is shown in the table below:

Setting value	Function	Range
0	Running frequency	0 ~ maximum output frequency
1	Setting frequency	0 ~ maximum output frequency
2	Output current	0 ~ 2 times motor rated current
3	Output torque	0 ~ 2 times motor rated torque
4	Output power	0 ~ 2 times rated power
5	Output voltage	0 ~ 1.2 times inverter rated voltage
6	HDI	0.01kHz ~ 100.00kHz
7	AI1	0V ~ 10V
8	AI2	0V ~ 10V (or 0 ~ 20mA)
9	Reserved	
10	Length	0 ~ maximum setting length
11	Count value	0 ~ maximum count value
12	Communication	0.0% ~ 100.0%
13	Motor speed	0 ~ maximum output frequency corresponding speed
14	Output current	0.0A~1000.0A
15	Output voltage	0.0V~1000.0V

P5-09	HDO output maximum frequency	Factory default	50.00kHz
	Setting range	0.01kHz ~ 100.00kHz	

When HDO terminal is selected as pulse output, this code is used to set the maximum frequency of output pulse.

P5-10	AO1 Zero-offset coefficient	Factory default	0.0%
	Setting range	-100.0% ~ +100.0%	

P5-11	AO1 gain	Factory default	1.00
	Setting range	-10.00 ~ +10.00	
P5-12	AO2 Zero-offset coefficient	Factory default	0.00%
	Setting range	-100.0% ~ +100.0%	
P5-13	AO2 gain	Factory default	1.00
	Setting range	-10.00 ~ +10.00	

The parameters are used to correct the zero drift of the analog output and the output amplitude deviation. They can also be used to define custom AO output curve.
If “b” represents zero offset, k represents gain, Y represents actual output, and X represents standard output, the actual output is: Y=kX+b;
Where,
100% of zero-offset coefficients of AO1 and AO2 corresponds to 10V (or 20mA).
Standard output denotes 0 to maximum analog output corresponding to the output of 0 to 10V (or 4mA to 20mA) without Zero-offset and gain correction.

If the field needs 4mA ~ 20mA analog output, the corresponding signal source for AO1, AO2 output analog signal (A9-09, A9-10) need to be selected, no need to set the zero-offset coefficient. The analog output deviation is corrected by the corresponding P5-11 and P5-13 gains.

P5-17	HDO open collector output delay time	Factory default	0.0s
	Setting range	0.0s ~ 3600.0s	
P5-18	Relay 1 output delay time	Factory default	0.0s
	Setting range	0.0s ~ 3600.0s	
P5-19	Relay 2 output delay time	Factory default	0.0s
	Setting range	0.0s ~ 3600.0s	

Set the delay time of output terminal HDO, relay 1 and relay 2. The delay time is time interval from the status changing to actual output changing.

P5-22	Output terminal valid status selection		Factory default	000
	Setting range	0	Positive logic	
		1	Negative logic	
		Units place	HDO valid status selection	
		Tens place	Relay 1 valid status setting (0 ~ 1, ibid)	
		Hundreds place	Relay 2 valid status setting (0 ~ 1, ibid)	

The output logic of output terminal HDO, relay 1 and relay 2.
0: Positive logic, the digital output terminal connects with the relevant COM is valid, disconnect invalid.
1: Negative logic, the digital output terminal connects with the relevant COM is invalid, disconnect valid.

Group P6 Start and Stop Control

P6-00	Start mode		Factory default	0
	Setting range	0	Direct start	
		1	Speed tracking and restart	
		2	Pre-excitation start	

0: Direct start
If DC braking time is set to 0, the inverter will start from the start frequency.
If DC braking time is set to nonzero value, DC braking will be performed firstly, then the inverter starts from the start frequency. It is suitable for the application that the motor maybe running during starting with small inertia load.
1: Speed tracking and restart
Inverter detects the rotation speed and direction of motor, and then starts to run at the detected speed and direction. This can realize smooth start of running motor with big inertia load when instantaneous power-off. To ensure the performance of speed tracking restart, please set motor parameters accurately. (Group P1)
2: pre-excitation start
Only valid for asynchronous motor, used to establish magnetic field before motor running. For pre-excitation current, pre-excitation time, please refer to P6-05, P6-06 instruction.
If pre-excitation time is set to 0, the inverter will cancel the pre-excitation process, start from the starting frequency. Or the inverter will make the pre-excitation, then start, which can improve the motor dynamic response performance.

P6-01	VF 0Hz output mode		Factory default	0
	Setting range	0	No output	
		1	With output	

The inverter output mode when the running frequency is 0Hz, this function is only valid for VF control.
0: When the running frequency is below a certain frequency, inverter doesn't output. Usually this mode is selected.
1: Inverter outputs at any running frequency.

P6-02	Overmodulation selection		Factory default	01
	Setting range	Units place	Overmodulation option	
		0	Disable	
		1	Enable	
		Tens place	Deep overmodulation option	
		0	Disable	
		1	Enable	

When the bus voltage is too low, it could raise the output voltage by overmodulation.

P6-03	Start frequency		Factory default	0.00Hz
	Setting range	0.00Hz ~ 10.00Hz		
P6-04	Start frequency holding time		Factory default	0.0s
	Setting range	0.0s ~ 100.0s		

Set proper start frequency can increase the start torque.
If the reference frequency is less than start frequency, inverter will be at stand-by status, and has no output.
The start frequency could be less than the lower frequency limit.
P6-04 takes no effect during FWD/REV switching.
Example 1:

P0-03=0 Frequency source is digital reference
P0-08=2.00Hz Digital setting frequency is 2.00Hz.
P6-03=5.00Hz Start frequency is 5.00Hz.
F6-04=2.0s Start frequency holding time is 2.0s.

At this time, the inverter is at standby status, and the output frequency is 0Hz.

Example 2:

P0-03=0 Frequency source is digital setting.
P0-08=10.00Hz Digital setting frequency is10.00Hz.
P0-03=5.00Hz Start frequency is 5.00Hz.
P0-04=2.0s Start frequency holding time is 2.0s.

At this time, the inverter accelerates to 5Hz, and further to the reference frequency 10Hz in 2s.

P6-05	DC braking current before start/pre-excitation current		Factory default	0%
	Setting range	0% ~ 100%		
P6-06	DC braking time before start/pre-excitation time		Factory default	0.0s
	Setting range	0.0s ~ 100.0s		

DC braking is used to make the running motor stop & restart. Pre-excitation is used to establish asynchronous motor magnetic field, then start, improve the response speed.
DC braking is only valid when start directly, the inverter performs DC braking according to P6-05 firstly, and runs after P6-06. If DC braking time is 0, the inverter starts directly. The bigger the DC braking current is, the greater the braking force is.
If the start mode is pre-excitation start, then the inverter establishes magnetic field according to the set pre-excitation current firstly, runs after the set pre-excitation time. If the pre-excitation time is 0, the inverter starts directly.
DC braking current before start/pre-excitation current refers to the percentage of the inverter rated current.

P6-07	ACC/DEC mode		Factory default	0
	Setting range	0	Linear ACC/DEC	

		1	S-curve ACC/DEC A
		2	S-curve ACC/DEC B

0: Linear ACC/DEC
The output frequency increases or decreases according to the straight line. 300A/300 series inverter has 4 kinds of ACC/DEC time, which can be set by P4-00 ~ P4-06.

1: S-curve ACC/DEC A
The output frequency increases or decreases according to S-curve. S-curve is suitable for applications which require start & stop smoothly, such as elevator and conveyor belt.
2: S curve ACC/DEC B
In the S-curve ACC/DEC B, the motor rated frequency f_b is always the inflection point of S curve, showed as figure 6-11. Suitable for the applications that the high speed area above rated frequency needs fast ACC/DEC.
When setting frequency is above rated frequency, ACC/DEC time is:

$$t = (\frac{4}{9} \times (\frac{f}{f_b})^2 + \frac{5}{9}) \times T$$

f is setting frequency, f_b is motor rated frequency, T is the ACC time from 0Hz to rated frequency.

P6-08	Time of S curve's start part		Factory default	30.0%
	Setting range	0.0% ~ (100.0%-P6-09)		
P6-09	Time of S curve's end part		Factory default	30.0%
	Setting range	0.0% ~ (100.0%-P6-08)		

S curve start time is shown in Figure 6-10 as t_1 set by P6-08, which is the stage when the slope of output frequency rises gradually.
S curve rise time is shown in Figure 6-10 as the time between t_1 and t_2, which is the stage when the slope of output frequency maintains phase.
S curve end time is shown in Figure 6-10 as t_2 set by P6-09, which is the stage when the slope of output frequency decreases to zero

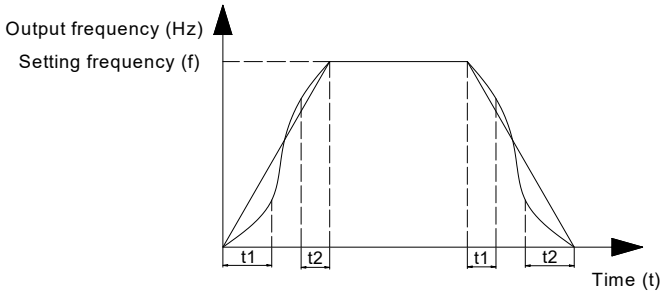

Figure 6-10 S curve ACC/DEC diagram

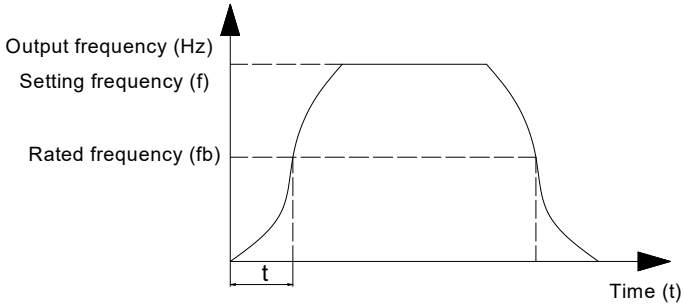

Figure 6-11 S-curve ACC/DEC A diagram

P6-10	Stop mode		Factory default	0
	Setting range	0	Deceleration to stop	
		1	Coast to stop	

0: Deceleration to stop

After the stop command is valid, the inverter reduces the output frequency according to the DEC time and will stop after the frequency reduces to zero.

1: Coast to stop

After the stop command is valid, the inverter blocks the output immediately. The motor coasts to stop according to the mechanical inertia.

P6-11	DC braking start frequency after stop		Factory default	0.00Hz
	Setting range	0.00Hz ~ P0.10 (maximum frequency)		
P6-12	DC braking waiting time after stop		Factory default	0.0s
	Setting range	0.0s ~ 100.0s		
P6-13	DC braking current after stop		Factory default	0%
	Setting range	0% ~ 100%		
P6-14	DC braking time after stop		Factory default	0.0s
	Setting range	0.0s ~ 100.0s		

DC braking start frequency after stop: Start the DC braking when running frequency reaches this frequency determined by P6-11.

DC braking waiting time after stop: Inverter blocks the output before starting the DC braking. After this waiting time, the DC braking will be started so as to prevent over-current fault caused by DC braking at high speed.

DC brake current after stop: The value of P6-13 is the percentage of rated current of inverter. The bigger the DC braking current is, the greater the braking torque is.

DC brake time after stop: The time which is used to perform DC braking. If the time is 0, the DC braking will be invalid.

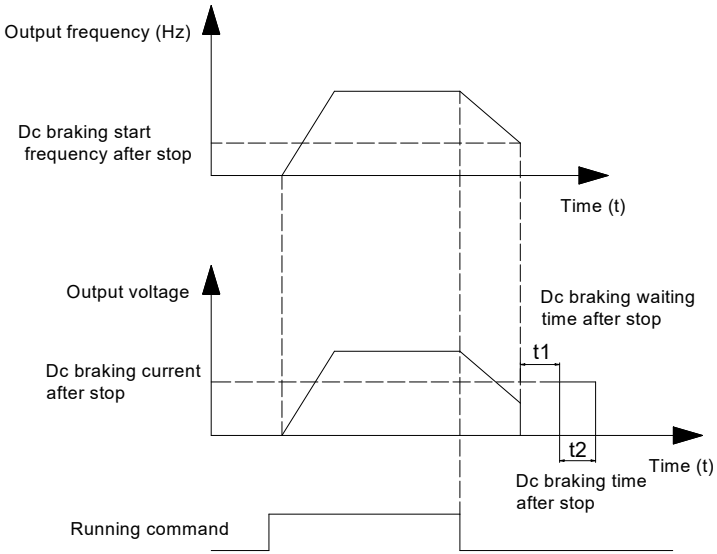

Figure 6-12 DC braking diagram

P6-15	Braking usage ratio		Factory default	100%
	Setting range	0% ~ 100%		

It is only valid for the inverter with built-in brake unit, can be used to adjust the braking effect of the brake unit.

Group P7 Keypad and Display

P7-00			Factory default	Model depend
	Setting range			

Display inverter rated power.

P7-01	QUICK/JOG function selection		Factory default	0
	Setting range	0	Invalid	
		1	Switching between keypad command and remote command (terminal command and communication command)	
		2	FDW/REV Switching	
		3	Forward Jog	
		4	Reverse Jog	

QUICK/JOG is a multifunctional key, whose function can be defined by the value

0: This key is invalid

1: Switching between keyboard command and remote operation. It refers to switching of command source, switching between the current command source and the keyboard control (local operation). If the current command source is keyboard control, this key is invalid.

2: Press QUICK/JOG, the running direction of inverter will change. It is only valid when keypad command is valid.

3: It can realize forward jog via QUICK/JOG key.

4: It can realize reverse jog via QUICK/JOG key.

P7-02	STOP/RST function selection		Factory default	1
	Setting range	0	Valid when keypad control	
		1	Always valid	

	Running status display 1		Factory default	81F
P7-03	Setting range	0000 ~ FFFF	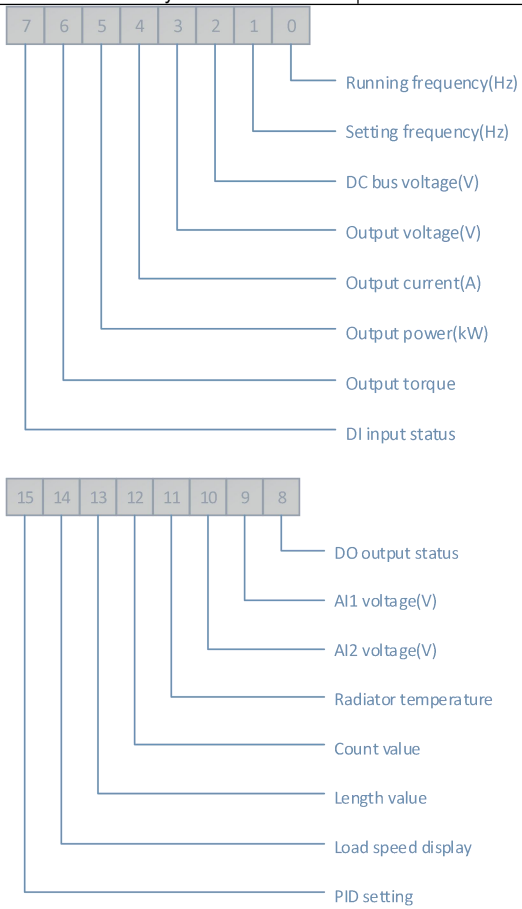 If the above parameters need to be displayed when running, set the corresponding positions to 1, and change the binary numbers into hexadecimal numbers, and then enter them into P7-03.	

	Running status display 2		Factory default	1
P7-04	Setting range	0000 ~ FFFF		

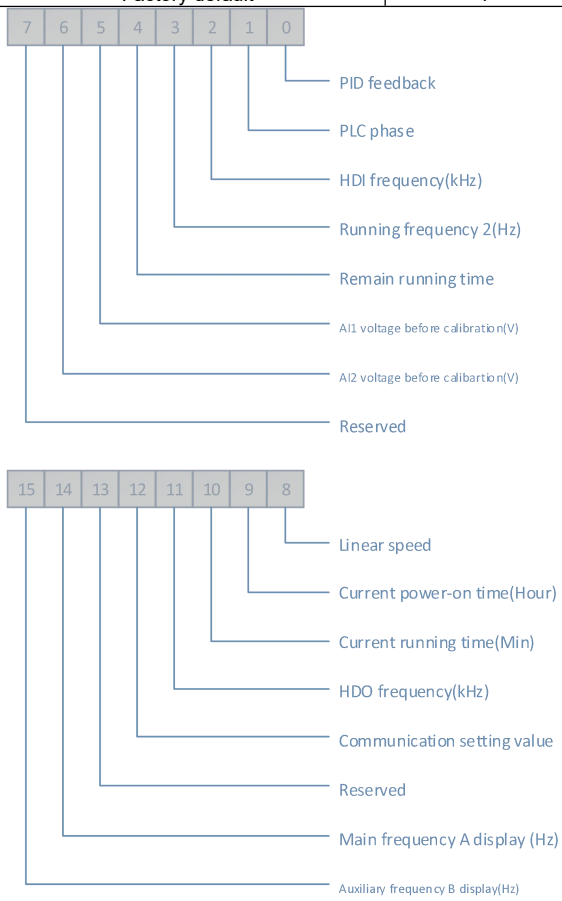

If the above parameters need to be displayed when running, set the corresponding positions to 1, and change the binary numbers into hexadecimal numbers, and then enter them into P7-04.

Operation display parameter is used to set the parameters which can be viewed when running.
There are at most 32 parameters can be viewed, set the status parameters via the binary bits of P7-03 and P7-04, and the display sequence starts from the lowest order of P7-03.

P7-05	Stop status display		Factory default	73
	Setting range	0000 ~ FFFF	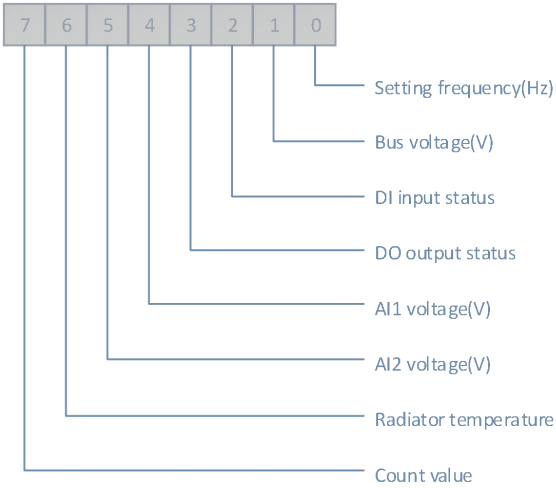 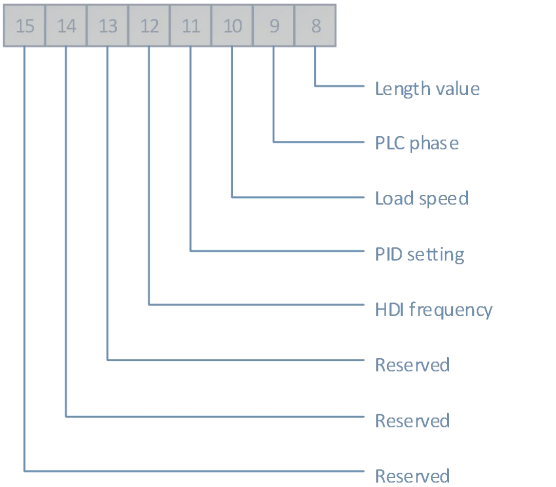 If the above parameters need to be displayed when stop, set the corresponding positions to 1, and change the binary numbers into hexadecimal numbers, and then enter them into P7-05.	

P7-06	Load speed display coefficient	Factory default	3.0000
	Setting range	0.0001 ~ 6.5000	

The correspondence of the inverter output frequency and the load speed can be adjusted via this parameter when the load speed needs to be displayed.

P7-07	IGBT module temperature	Factory default	—
	Setting range	0.0℃ ~ 100.0℃	

Display IGBT module temperature.
The over temperature protection values of different IGBT modules are not the same.

P7-08	Inverter rated voltage	Factory default	Model depend
	Setting range	1V~2000V	

Display inverter rated voltage.

P7-09	Accumulated running time	Factory default	—
	Setting range	0h ~ 65535h	

Display the accumulated running time of the inverter. When the running time reaches the value set by P8-17, the digital output terminal outputs ON signal.

P7-10	Model No.	Factory default	-
	Setting range	Inverter model No.	
P7-11	Software version No.	Factory default	-
	Setting range	Control software version No.	
P7-12	Load speed display decimal place	Factory default	0
	Setting range	0	0 decimal place
		1	1 decimal place
		2	2 decimal places
		3	3 decimal places

The parameters are used to set load speed display decimal place. The following load speed calculation format for example:
If load speed display factor (P7-06) is 2.000, load speed decimal place (P7-12) is 2 (2 decimal places), when the running frequency is 40.00Hz, load speed is: 40.00×2.000=80.00 (2 decimal places displayed)
If the inverter stops, load speed is displayed as setting frequency corresponding speed, namely “setting load speed”. If setting frequency=50.00Hz, the stop status load speed is: 50.00×2.000=100.00 (2 decimal places displayed)

P7-13	Accumulated power-on time		Factory default	0h
	Setting range	0h ~ 65535h		

Display the accumulated power-on time after production.
When this time reaches the value set by P8-17, the inverter multifunctional digital output function (24) outputs ON signal.

P7-14	Accumulated power consumption		Factory default	-
	Setting range	0kW ~ 65535 kW		

Display the accumulated power consumption till now.

Group P8 Enhanced Function

P8-00	Jog running frequency		Factory default	2.00Hz
	Setting range	0.00Hz ~ P0-10 (maximum frequency)		
P8-01	Jog acceleration time		Factory default	20.0s
	Setting range	0.1s ~ 3600.0s		
P8-02	Jog deceleration time		Factory default	20.0s
	Setting range	0.1s ~ 3600.0s		

It is used to define the reference frequency and ACC/DEC time of the inverter when jogging.
During Jog running, the start mode is fixed to direct start (P6-00=0), the stop mode is fixed to deceleration to stop (P6-10=0).

P8-03	Acceleration time 2		Factory default	Model depend
	Setting range	0.1s ~ 3600.0s		
P8-04	Deceleration time 2		Factory default	Model depend
	Setting range	0.1s ~ 3600.0s		
P8-05	Acceleration time 3		Factory default	Model depend
	Setting range	0.1s ~ 3600.0s		
P8-06	Deceleration time 3		Factory default	Model depend
	Setting range	0.1s ~ 3600.0s		
P8-07	Acceleration time 4		Factory default	Model depend
	Setting range	0.1s ~ 3600.0s		
P8-08	Deceleration time 4		Factory default	Model depend
	Setting range	0.1s ~ 3600.0s		

300A/300 series inverter supplies 4 kinds of ACC/DEC time. The principles of them are the same. Please refer to description of P0-17 and P0-18 for more details.
User can select the one of 4 kinds ACC/DEC time thought the different combination of DI terminals. See the description of P4-00~P4-05, then pay attention to Function (16) & Function (17) and Attached table 2.

P8-09	Jump frequency 1		Factory default	0.00Hz
	Setting range	0.00Hz ~ P0-10 (maximum frequency)		
P8-10	Jump frequency 2		Factory default	0.00Hz
	Setting range	0.00Hz ~ P0-10 (maximum frequency)		
P8-11	Jump frequency amplitude		Factory default	0.00Hz
	Setting range	0.00 ~ P0-10 (maximum frequency)		

By means of setting jump frequency, the inverter can keep away from the mechanical resonance with the load. P8.09 and P8.10 are center value of frequency to be skipped.
If both P8-09 and P8-10 are 0, the jump frequency function is invalid no matter what P8.11 is.

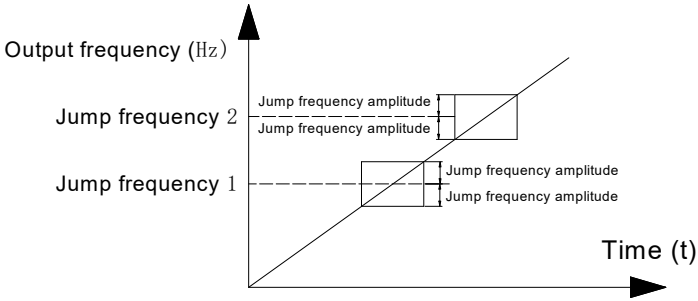

Figure 6-13 Jump frequency diagram

P8-12	FWD/REV dead time		Factory default	0.0s
	Setting range	0.00s ~ 3600.0s		

FWD/REV dead time: The waiting and holding time before the motor changes its spinning direction after the inverter's output frequency is decreased to zero. It is the time taken by the motor to change its spinning direction when the inverter receives REV command during its running process. The time is shown in Figure 6-14:

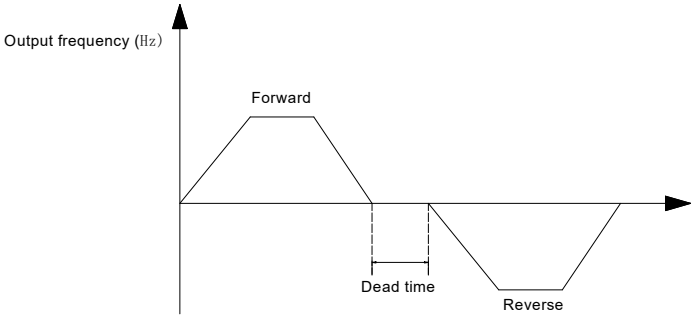

Figure 6-14 FWD/REV dead time diagram

P8-13	Reverse control		Factory default	0
	Setting range	0	Valid	
		1	Invalid	

It is used to set if the inverter can run reverse, P8-13 is set to 1 for the applications that the motor can not run reverse.

P8-14	Action when setting frequency lower than frequency lower limit		Factory default	0
	Setting range	0	Running at frequency lower limit	
		1	Stop	
		2	Zero speed running	

It is used to select the inverter running status when the setting frequency is lower than the frequency lower limit.

P8-15	Droop control		Factory default	0.00Hz
	Setting range	0.00Hz ~ 10.00Hz		

When several motors drive the same load, each motor's load is different because of the difference of motor's rated speed. The load of different motors can be balanced through droop control function which makes the speed droop along with load increase.
When the motor outputs rated torque, actual frequency drop is equal to P8-15. User can adjust this parameter from small to big gradually during commissioning.

P8-18	Power-on running command valid protection selection		Factory default	0
	Setting range	0	No protection	
		1	Protection	

1. If power-on running command is valid (for example, the terminal running command is close before power on), the inverter will not response the running command. After the running command is removed & valid again, the inverter will response.
2. If the fault reset running command is valid, the inverter will not response the running commend, user must cancel the running command to remove the running protection status.
3. This code is set to 1 so as to avoid dangerous caused by that motor responses running command during power-on or fault reset.

P8-19	Frequency detection value (FDT1)		Factory default	50.00Hz
	Setting range	0.00Hz ~ P0-10 (maximum frequency)		
P8-20	Frequency detection lag (FDT1)		Factory default	5.0%
	Setting range	0.0% ~ 100.0% (FDT1 level)		

When the output frequency reaches a certain preset frequency (FDT level), DO terminal will output an ON signal until output frequency drops below a certain frequency of FDT level (FDT level - FDT lag), as shown in following figure.

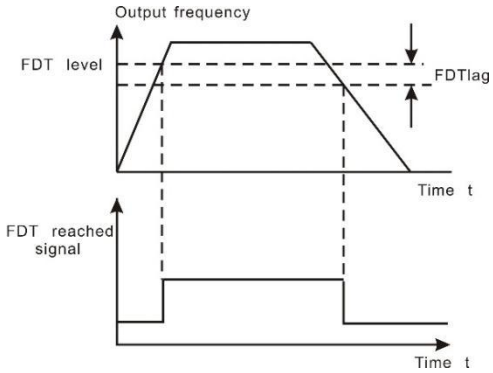

Figure 6-15 FDT Level and lag diagram

P8-21	Frequency arrival detection amplitude	Factory default	0.0%
	Setting range	0.00 ~ 100% (maximum frequency)	

When output frequency is within the detecting range of reference frequency, an ON-OFF signal will be output. The function can adjust the detecting range.

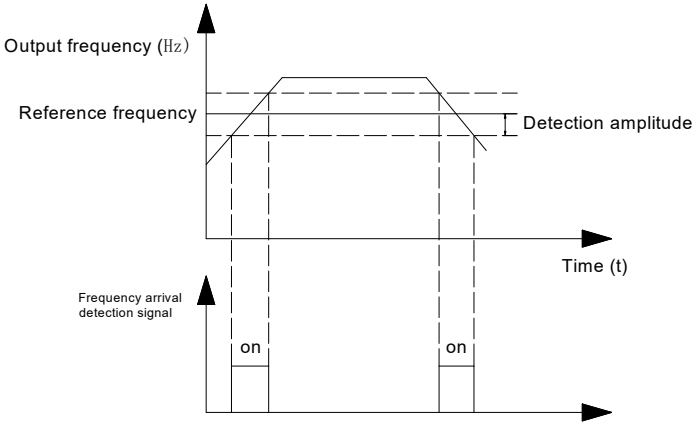

Figure 6-16 Frequency arrival detection diagram

P8-22	Jump frequency during ACC/DEC	Factory default	0
	Setting range	0: Invalid 1: Valid	

It is used to set if jump frequency is valid during ACC/DEC.
When valid, the running frequency is in the range of jump frequency, the actual running frequency will skip the boundary of the setting jump frequency.

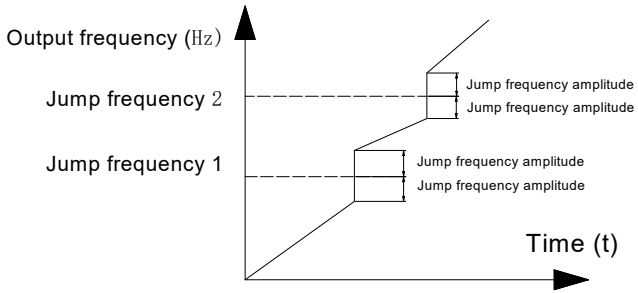

Figure 6-17 Jump frequency during ACC/DEC diagram

P8-25	Acceleration time 1 and acceleration time 2 switching frequency point	Factory default	0.00Hz
	Setting range	0.00Hz ~ P0-10 (maximum frequency)	

P8-26	Deceleration time 1 and deceleration time 2 switching frequency point	Factory default	0.00Hz
	Setting range	0.00Hz ~ P0-10 (maximum frequency)	

This function is valid when don't use DI terminal to switch ACC/DEC. Suitable for the inverter running process, choose different ACC/DEC time according to the running frequency range (instead of through DI terminals).

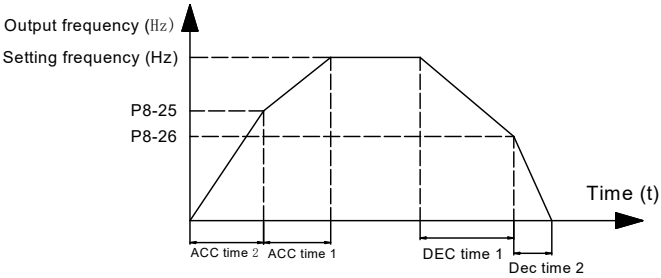

Figure 6-18 ACC/DEC time switching diagram

During ACC, if the running frequency is lower than P8-25, then select ACC time 2, if the running frequency is higher than P8-25, then select ACC time 1.
During DEC, if the running frequency is higher than P8-26, then select DEC time 1, if the running frequency is lower than P8-26, then select DEC time 2.

P8-27	Terminal jog priority	Factory default	0
	Setting range	0: Invalid 1: Valid	

It is used to set whether the priority of terminal jog function is the highest.
When terminal jog priority is valid, if terminal jog command appears when running, the inverter switches to terminal jog running status.

P8-28	Frequency detection value (FDT2)	Factory default	50.00Hz
	Setting range	0.00Hz ~ P0-10 (maximum frequency)	
P8-29	Frequency detection lag value (FDT2)	Factory default	5.0%
	Setting range	0.0% ~ 100.0% (FDT2 level)	

This frequency detection function is the same as FDT1's, please refer to description of FDT1 (P8-19, P8-20).

P8-30	Any arrival frequency detection value 1	Factory default	50.00Hz
	Setting range	0.00Hz ~ P0-10 (maximum frequency)	
P8-31	Any arrival frequency detection amplitude 1	Factory default	0.0%
	Setting range	0.0% ~ 100.0% (maximum frequency)	
P8-32	Any arrival frequency detection value 2	Factory default	50.00Hz

	Setting range	0.00Hz ~ P0-10 (maximum frequency)		
P8-33	Any arrival frequency detection amplitude 2		Factory default	0.0%
	Setting range	0.0% ~ 100.0% (maximum frequency)		

When the output frequency reaches positive or negative detection amplitude of frequency detection value, DO outputs ON signal. 300A/300 series inverter provides two parameters of any arrival frequency detection value, used to set frequency value and frequency detection range.

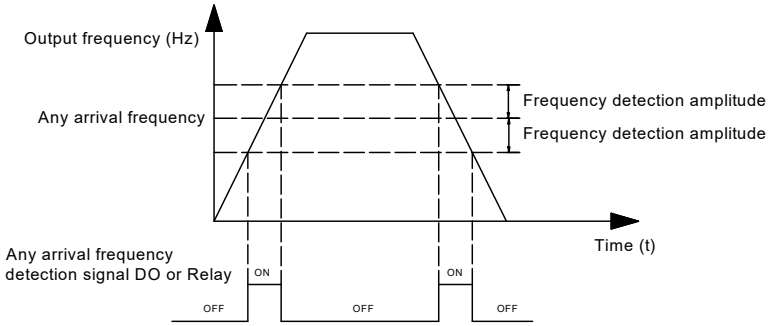

Figure 6-19 Any arrival frequency detection diagram

P8-34	Zero-current detection level		Factory default	5.0%
	Setting range	0.0% ~ 300.0% (100.0% corresponds to motor rated current)		
P8-35	Zero-current detection delay time		Factory default	0.10s
	Setting range	0.00s ~ 360.00s		

When the output current ≤ zero current detection level, lasts for longer than zero current detection delay time, DO terminal outputs ON signal.

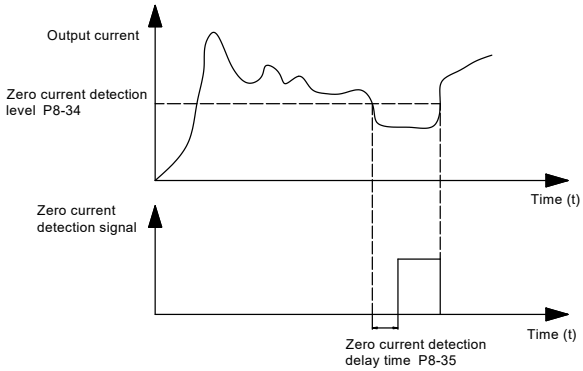

Figure 6-20 Zero-current detection diagram

P8-36	Output current over limit value	Factory default	200.0%
	Setting range	0.0% (No detection) 0.1% ~ 300.0% (motor rated current)	
P8-37	Output current over limit detection delay time	Factory default	0.00s
	Setting range	0.00s ~ 360.00s	

When the output current is bigger than or over-limit detection point, lasts for longer than software over current point detection delay time, DO terminal outputs ON signal.

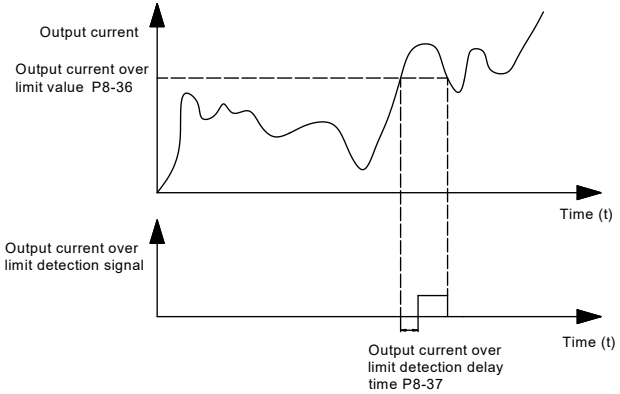

Figure 6-21 Output current over limit function diagram

P8-38	Any arrival current 1	Factory default	100.0%
	Setting range	0.0% ~ 300.0% (motor rated current)	
P8-39	Any arrival current 1 amplitude	Factory default	0.0%
	Setting range	0.0% ~ 300.0% (motor rated current)	
P8-40	Any arrival current 2	Factory default	100.0%
	Setting range	0.0% ~ 300.0% (motor rated current)	
P8-41	Any arrival current 2 amplitude	Factory default	0.0%
	Setting range	0.0% ~ 300.0% (motor rated current)	

When the output current is in the range of positive or negative detection amplitude of setting any arrival current, DO terminal outputs ON signal. 300A/300 series inverter provides two parameters of any arrival current and detection amplitude.

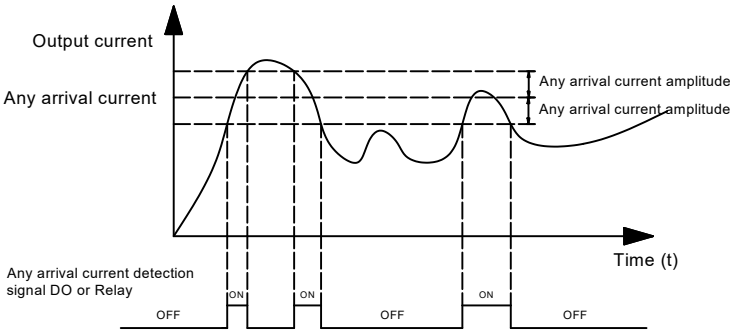

Figure 6-22 Any arrival current detection diagram

P8-42	Timing function selection		Factory default	0
	Setting range	0	Invalid	
		1	Valid	
P8-43	Timing running time selection		Factory default	0
	Setting range	0	P8-44	
		1	AI1	
		2	AI2	
		3	Keypad potentiometer	
		P8-44 Analog input scale 100% corresponds to P8-44		
P8-44	Timing running time		Factory default	0.0Min
	Setting range	0.0Min ~ 3600.0Min		

The parameters are used to set the inverter timing running function.
When P8-42 timing function selection is valid, timing starts after the inverter starts, reaches the setting timing running time, the inverter stops automatically, meantime, DO terminal outputs ON signal.
Timing starts from 0 when the inverter starts, timing remain running time can be viewed via U0-20.
The timing running time is set by P8-43, P8-44, time unit is minute.

P8-45	AI1 input voltage protection lower limit		Factory default	3.10V
	Setting range	0.00V ~ P8-46		
P8-46	AI1 input voltage protection upper limit		Factory default	6.80V
	Setting range	P8-45 ~ 10.00V		

When the analog input AI1 value is bigger than P8-46, or smaller than P8-45, DO terminal outputs “AI1 input over limit” ON signal, used to indicate whether AI1 input voltage is in the setting range.

P8-47	Module temperature arrival		Factory default	75℃
	Setting range	0℃ ~ 100℃		

When the converter radiator temperature reaches this value, DO outputs “module temperature arrival” ON signal.

P8-48	Cooling fan control	Factory default	0
	Setting range	0: Fan runs when operation 1: Fan always runs	

It is used to select cooling fan action mode,

When the selection is 0, cooling fans run when the inverter running, when the inverter stops & the radiator temperature is higher than 40℃, cooling fans run.

When the inverter stops & the radiator temperature is lower than 40℃, cooling fans stop.

When the selection is 1, cooling fans always run after power-on.

P8-49	Wake up frequency	Factory default	0.0
	Setting range	0.00 ~ PA-04 (PID given feedback range)	
P8-50	Wake-up delay time	Factory default	0.0s
	Setting range	0.0s ~ 3600.0s	
P8-51	Dormancy frequency	Factory default	0.00Hz
	Setting range	0.00Hz ~ P0-10(maximum frequency)	
P8-52	Dormancy delay time	Factory default	0.0s
	Setting range	0.0s ~ 3600.0s	

The parameters are used to achieve dormancy and wake up function in water-supply applications.

During running, when the setting frequency ≤ P8-51 dormancy frequency, lasts for P8-52 delay time, the inverter enters into dormancy status & stops automatically.

When the inverter is in the dormancy status & the present running command is valid, if the setting frequency ≥ P8-49 wake up frequency lasts for P8-50 delay time, the inverter starts.

Normally please set wake up frequency ≥ dormancy frequency. Setting both wake up frequency and dormancy frequency are 0.00Hz, then wake up and dormancy functions are invalid.

When starting dormancy function, if frequency source is set by PID, PA-28 will affect whether dormancy status PID calculates or not, PID stop calculation function must be set to be 1 (namely PA-28=1).

P8-53	Running arrival time setting	Factory default	0.0Min
	Setting range	0.0Min ~ 3600.0Min	

When the running time reaches the time set by P8-53, DO outputs “Running arrival time setting” ON signal.

Group P9 Fault and Protection

P9-00	Motor overload protection selection		Factory default	1
	Setting range	0	Invalid	
		1	Valid	
P9-01	Motor overload protection gain		Factory default	1.00
	Setting range		0.20 ~ 10.00	

P9-00=0: Has no motor overload protection function, may cause the motor overheating damaged.
P9-00=1: The inverter judges whether the motor is overload or not according to the inverse time limit curve of motor overload protection.
The inverse time limit curve of motor overload protection: 220% * (P9-01) * motor rated current, lasts for one second, the overload fault would be reported; 150% * (P9-01) * motor rated current, lasts for 60 seconds, the overload fault would be reported.
Please set P9-01 according to the motor overload ability. If the parameter is too big, the motor will over heat damage without alarming.

P9-02	Motor overload pre-warning coefficient		Factory default	80%
	Setting range	50% ~ 100%		

For safe consideration, there is a pre-warning signal sent to the control system via DO before the motor overload fault protection, the pre-warning coefficient is used to confirm the extent of pre-warning before the motor overload protection. The bigger the parameter is, the smaller the pre-warning lead is.
After the accumulated output current is bigger than (P9-02)*overload inverse time limit curve, DO outputs “motor overload pre-warning” ON signal.

P9-03	Over-voltage stall gain		Factory default	0
	Setting range	0 (No over voltage stall) ~ 100		
P9-04	Over-voltage stall protection voltage		Factory default	130%
	Setting range	120% ~ 150% (three phase)		

During deceleration, after DC bus voltage exceeds over-voltage stall protection voltage, the inverter stops deceleration & runs with the current frequency, continue decelerating after bus voltage drops.
Over-voltage stall gain is used to adjust the suppression over-voltage capacity during deceleration. The bigger this value is, the stronger the capacity is. Under the precondition of no over-voltage, please set the gain as small as possible.
For the load with small inertia, the value should be small. Otherwise, the dynamic response of the system will be slow. For the load with big inertia, the value should be big. Otherwise, the suppression result will be poor, and over voltage fault may occur.
When the value is 0, the over voltage stall function is invalid.

P9-05	Over-current stall gain		Factory default	20
	Setting range	0 ~ 100		
P9-06	Over-current stall protection current		Factory default	160%
	Setting range	100% ~ 200%		

During the inverter ACC/DEC, when the output current exceeds over-current stall protection current, the inverter stops ACC/DEC, runs with the current frequency, continue ACC/DEC after the output current is reduced.

Over-current stall gain is used to adjust the suppression over-current capacity during ACC/DEC. The bigger this value is, the stronger the capacity is. Under the precondition of no over-current, please set the gain as small as possible.

For the load with small inertia, the value should be small. Otherwise, the dynamic response of the system will be slow. For the load with big inertia, the value should be big. Otherwise, the suppression result will be poor, and over-current fault may occur.

When the value is 0, the over-voltage stall function is invalid.

P9-07	Short circuit to ground protection selection when power-on		Factory default	1
	Setting range	0	Invalid	
		1	Valid	

It is used to check if the motor is short circuit to ground when the inverter is power on.

If the function is valid, the inverter UVW terminals have output voltage after power on for a while.

P9-09	Fault auto reset times		Factory default	0
	Setting range	0 ~ 5		

After the inverter fails in running process, the inverter stops its output; then performs auto fault reset and continues running after the reset interval defined in P9-11.

P9-09 is used to set fault auto reset times. After this value is exceeded, the inverter will keep fault status.

When the fault auto reset time is setup to 0, there is no auto-reset function, and only manual reset can be done.

P9-10	Faulty HDO action selection during fault auto resetting		Factory default	0
	Setting range	0:No action 1: Action		

If fault auto reset function is valid, during fault auto resetting, fault reply action or not can be set via P9-10.

P9-11	Fault auto reset interval		Factory default	1.0s
	Setting range	0.1s ~ 100.0s		

The waiting time of the inverter from the fault alarm to auto reset.

P9-12	Input phase failure protection selection		Factory default	1
	Setting range	0: Invalid 1: Valid		

Select to protect input phase failure or not. This protection is only effective for below models:

Voltage level	Models
Single phase 220V	NO

Three phase 220V	⩾7.5kW
Three phase 380V	⩾11kW
Three phase 480V	⩾11kW
Three phase 660V	All

P9-13	Output phase failure protection selection	Factory default	1
	Setting range	0: Invalid 1: Valid	

Select to protect output phase failure or not.

P9-14	The first fault type	0 ~ 50
P9-15	The second fault type	
P9-16	The third (last) fault type	

It is used to record the fault types of last three times: 0 indicates no fault, please refer to Chapter 8 for solutions.

P9-17	The third fault frequency	The last fault frequency
P9-18	The third fault current	The last fault current
P9-19	The third (last) fault bus voltage	The last fault bus voltage
P9-20	The third fault type output terminal status	The last fault type output terminal status, sequence: when the input terminal is ON, the corresponding binary bit is 1, when the input terminal is OFF, the corresponding binary bit is 0. All DI statuses are displayed as decimal numbers.
P9-21	The third fault type output terminal	The last fault type output terminal status, sequence: when the input terminal is ON, the corresponding binary bit is 1, when the input terminal is OFF, the corresponding binary bit is 0. All DO statuses are displayed as decimal numbers.
P9-22	The third fault inverter status	The last fault inverter status
P9-23	The third (last) fault power on time	The last fault power on time
P9-24	The third (last) fault running time	The last fault running time
P9-27	The second fault frequency	Same as P9-17 ~ P9-24
P9-28	The second fault current	
P9-29	The second fault bus voltage	
P9-30	The second fault input terminal status	
P9-31	The second fault output terminal status	
P9-32	The second fault inverter status	
P9-33	The second fault power on time	
P9-34	The second fault running time	
P9-37	The first fault frequency	Same as P9-17 ~ P9-24

P9-38	The first fault current
P9-39	The first fault bus voltage
P9-40	The first fault input terminal status
P9-41	The first fault output terminal status
P9-42	The first fault inverter status
P9-43	The first fault power on time
P9-44	The first fault running time

P9-47	Fault protection action selection 1		Factory default	00000
	Setting range	Units place	Motor overload (E-11)	
		0	Coast to stop	
		1	Dec-to-stop	
		2	Keep running	
		Tens place	Input phase failure (E-12) (same as units place)	
		Hundreds place	Output phase failure (E-13) (same as units place)	
		Thousands place	External fault (E-14) (same as units place)	
		Ten thousands place	Communication fault (E-15) (same as units place)	
P9-48	Fault protection action selection 2		Factory default	00000
	Setting range	Units place	Reserved	
		Tens place	E^2PROM W/R fault (E-21)	
		0	Coast to stop	
		1	Dec-to-stop	
		Hundreds place	Reserved	
		Thousands place	Reserved	
		Ten thousands place	Running time arrival (E-26) (same as units place of P9-47)	
P9-49	Fault protection action selection 3		Factory default	00000
	Setting range	Units place	Customized fault 1 (E-27) (same as units place of P9-47)	
		Tens place	Customized fault 2 (E-28) (same as units place of P9-47)	
		Hundreds place	Power-on time arrival (E-29) (same as P9-487 units place)	
		Thousands place	Off load (E-30)	
		0	Coast to stop	
		1	Dec-to-stop	
		2	Deceleration to 7% of motor rated power, then keep running; run at setting frequency when no off-load	

		Ten thousands place	PID feedback lost when running (E-31) (same as units place of P9-47)	
P9-50	Fault protection action selection 4		Factory default	00000
	Setting range	Units place	Speed deviation oversize (E-42) (same as units place of P9-47)	
		Tens place	Motor over speed (E-43) (same as units place of P9-47)	
		Hundreds place	Reserved	
		Thousands place	Reserved	
		Ten thousands place	Reserved	

When the selection is “Coast to stop”, the inverter shows E-** and stops directly.
When the selection is “Dec- to-stop”, the inverter shows A-** and decelerates to stop, then shows E-** after stopping.
When the selection is “keep running”, the inverter shows A-** and keeps running, the running frequency is set by P9-54.

P9-54	Running frequency selection continuously when fault		Factory default	0
	Setting range	0	Run at current running frequency	
		1	Run at setting frequency	
		2	Run at upper limit frequency	
		3	Run at lower limit frequency	
		4	Run at abnormal backup frequency	
P9-55	Abnormal backup frequency		Factory default	100.0%
	Setting range		60.0% ~ 100.0%	

When a fault happens during running and the fault process mode is keep running, the inverter shows A-** with the frequency set by P9-54.
When the inverter is running with the abnormal backup frequency, the value set by P9-55 corresponds to maximum frequency percentage.

P9-59	Instantaneous power-off action		Factory default	0
	Setting range	0	Invalid	
		1	Deceleration	
		2	Dec-to-stop	
P9-60	Instantaneous power-off recover judgment voltage		Factory default	90.0%
	Setting range		80.0% ~ 100.0%	

P9-61	Instantaneous power-off voltage recover judgment time	Factory default	0.50s
	Setting range	0.00s ~ 100.00s	

P9-62	Instantaneous power-off action judgment voltage	Factory default	80.0%
	Setting range	60.0% ~ 100.0% (standard bus voltage)	

The function is that, when instantaneous power off or voltage drops suddenly, the inverter will reduce output speed to decrease compensation voltage for DC bus which is generated by the load feedback energy, so that keep the inverter running.

P9-59=1: When instantaneous power off or voltage drops suddenly, the inverter decelerates, when bus voltage returns to normal, the inverter accelerates to the setting frequency and runs. Normal bus voltage lasts for longer than the time set by P9-61 means that bus voltage returns to normal.

P9-59=2: When instantaneous power off or voltage drops suddenly, the inverter decelerates to stop.

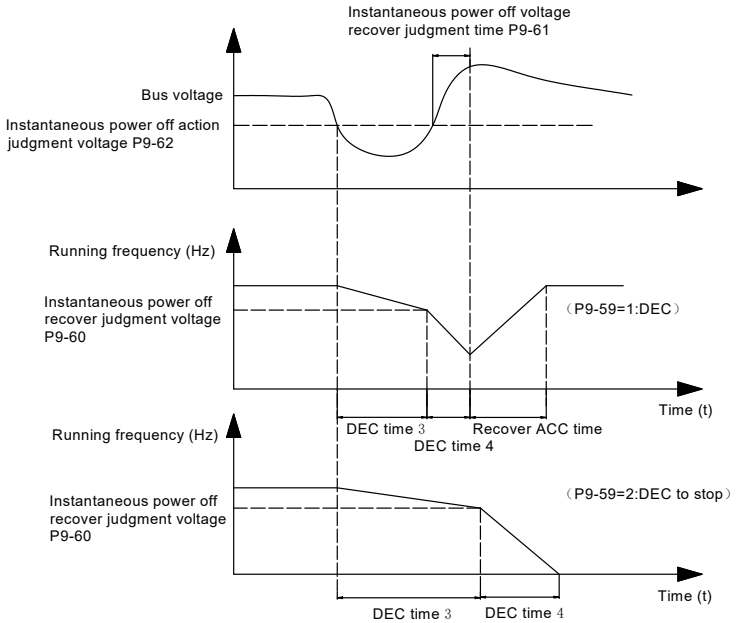

Figure 6-23 Instantaneous stop action diagrams

P9-63	Off-load protection selection		Factory default	0
	Setting range	0	Invalid	
		1	Valid	
P9-64	Off-load detection level		Factory default	10.0%
	Setting range		0.0% ~ 100.0% (motor rated current)	
P9-65	Off-load detection time		Factory default	1.0s
	Setting range		0.0s ~ 60.0s	

If off-load protection function is valid, when the output current is smaller than off-load detection level P9-64, lasts for longer than off-load detection time P9-65, the output frequency will reduce to 7% of the rated frequency automatically. During off-load protection, if load recovers, the inverter will recover and run with the setting frequency automatically.

Group PA PID Function

PID control is a common used method in process control, such as flow, pressure and temperature control. The principle is firstly to detect the bias between preset/given value and feedback value, then calculate output frequency of inverter according to proportional gain, integral and differential time. Please refer to following figure.

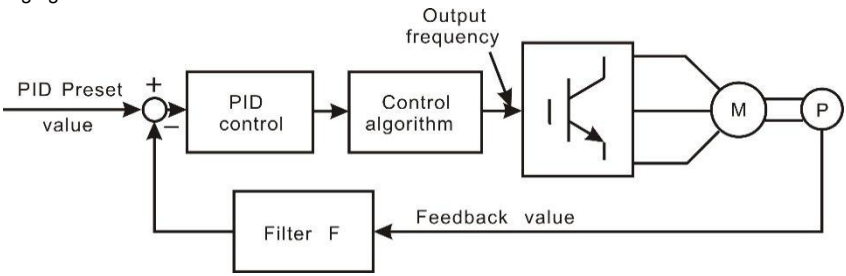

Figure 6-24 PID control diagram

PA-00	PID given source		Factory default	0
	Setting range	0	PA-01	
		1	AI1	
		2	AI2	
		3	Keypad potentiometer	
		4	High speed pulse HDI	
		5	Communication	
		6	Multi-step command	
PA-01	PID keypad given		Factory default	0.0
	Setting range		0.0 ~ PA-04(PID given feedback range)	

This parameter is used to select the given channel of PID target value

This value is an actual physical quantity. It must correspond to the measure range. For example, if the PID keypad given value is 0.3Mpa, PA-01 should be set to 3.0.

PA-02	PID feedback source		Factory default	0
	Setting range	0	AI1	
		1	AI2	
		2	Keypad potentiometer	
		3	AI1－AI2	
		4	High speed pulse HDI	
		5	Communication	
		6	AI1+AI2	
		7	MAX (|AI1|,|AI2|)	
		8	MIN (|AI1|,|AI2|)	

These parameters are used to select PID given and feedback source.
Notice: Given value and feedback value of PID are percentage values.
100% of given value is corresponding to 100% of feedback value.
Given source and feedback source must not be same, otherwise PID will be malfunction.

PA-03	PID action direction		Factory default	0
	Setting range	0	Positive	
		1	Negative	

0: Positive. When the feedback value is greater than the given value, output frequency will be decreased, such as tension control in winding application.
1: Negative. When the feedback value is greater than the given value, output frequency will be increased, such as tension control in unwinding application.

PA-04	PID given/feedback range		Factory default	100.0
	Setting range	PA-01(PID given through keypad)~ 1000.0		

PID given feedback range is a non-dimensional unit. It must correspond to the actual measure range. For example, if the measure range of the pressure meter is 1.0 Mpa, then this parameter should be set to 10.

PA-05	Proportional gain K_p1		Factory default	20.0
	Setting range	0.0 ~ 100.0		
PA-06	Integration time T_i1		Factory default	2.00s
	Setting range	0.01s ~ 10.00s		
PA-07	Differential time T_d1		Factory default	0.000s
	Setting range	0.00 ~ 10.000		

Proportional gain K_p1: It decides the adjustment intensity of the whole PID regulator. The higher the K_p1 is, the stronger the adjustment intensity is. When this parameter is 100, indicating the deviation between PID feedback value and given value is 100%, the adjustment amplitude of the PID regulator on the output frequency command is maximum frequency.
Integration time T_i1: It decides the intensity of the integration adjustment of PID regulator. The shorter the integration time is, the stronger the adjustment intensity is. Integration time is the time within which the adjustment value reaches maximum frequency when the deviation between PID feedback value and given value is 100%.
Differential time T_d1: It decides the intensity of the deviation change rate of PID regulator. The longer the differential time is, the stronger the adjustment intensity is. Differential time is the time within which if the feedback value changes 100%, the adjustment value reaches maximum frequency.

PA-08	Cut-off frequency of PID reverse		Factory default	0.00Hz
	Setting range	0.00 ~ P0-10 (maximum frequency)		

In some situation, only when PID output frequency is negative (inverter reverse), PID can make given value and feedback value in a same status. But the reverse frequency cannot be too high for some applications. The reverse frequency upper limit is determined by PA-08.

PA-09	PID deviation limit		Factory default	0.0%
	Setting range	0.0% ~ 100.0%		

When the deviation between PID given value and feedback value is smaller than PA-09, PID stops adjustment. The output frequency is stable when the deviation is small, which is suitable for some close loop control applications.

PA-10	PID differential amplitude		Factory default	0.10%
	Setting range	0.00% ~ 100.00%		
PA-11	PID given filter time		Factory default	0.00s
	Setting range	0.00s ~ 650.00s		

PID given filter time is the time that PID given value changes from 0.0% to 100.0%.
When PID given is changing, PID given value linearly changes according to the given filter time, so as to reduce the adverse effect of the system caused by the given sudden change.

PA-12	PID feedback filter time		Factory default	0.00s
	Setting range	0.00s ~ 60.00s		
PA-13	PID output filter time		Factory default	0.00s
	Setting range	0.00s ~ 60.00s		

PA-12 is used to filter the PID feedback value, this filter can improve anti-interference capability of feedback value, but will bring the response performance of the process close loop system down.
PA-13 is used to filter the PID output frequency, this filter will reduce the sudden change of the inverter output frequency, but also will bring the response performance of the process close loop system down.

PA-14	Sampling period		Factory default	2
	Setting range	0.00～65535		

The sampling period of the feedback value is calculated once in each sampling period. The larger the sampling period is, the slower the response is. The set value *2 (ms) is the sampling period.

PA-15	Proportional gain K_p2		Factory default	20.0
	Setting range		0.0 ~ 100.0	
PA-16	Integration time T_i2		Factory default	2.00s
	Setting range		0.01s ~ 10.00s	
PA-17	Differential time T_d2		Factory default	0.000s
	Setting range		0.00 ~ 10.000	
PA-18	PID parameter switching condition		Factory default	0
	Setting range	0	No switching	
		1	Switching via terminals	

		2	Automatic switching according to the deviation	
PA-19	PID parameter switching deviation 1		Factory default	20.0%
	Setting range		0.0% ~ PA-20	
PA-20	PID parameter switching deviation 2		Factory default	80.0%
	Setting range		PA-19 ~ 100.0%	

In some applications, one group PID parameter is not enough, different PID parameters would be adopted according to the situation.

The function codes are used to switch two groups PID parameter. The setting mode of the regulator parameters PA-15~PA-17 is similar as PA-05~PA-07's.

Two groups PID parameter can be switched via DI terminal, or switched according to PID deviation automatically.

When selection is automatic switching: when the deviation absolute value between given and feedback is smaller than PA-19 (PID parameter switching deviation 1), PID parameter selection is group 1. When the deviation absolute value between given and feedback is bigger than PA-20 (PID parameter switching deviation 2), PID parameter selection is group 2. When the deviation absolute value between given and feedback is between PA-19 and PA-20, PID parameter is the linear interpolation of two groups PID parameter, showed as figure 6-25.

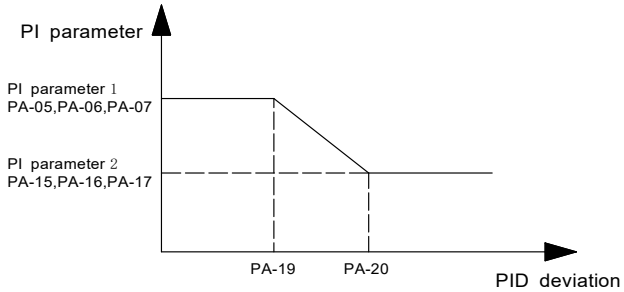

Figure 6-25 PID parameter switching diagram

PA-21	PID initial value	Factory default	0.0%
	Setting range	0.0% ~ 100.0%	
PA-22	PID initial value holding time	Factory default	0.00s
	Setting range	0.00s ~ 360.00s	

When starting, PID output is PID initial value (PA-21), lasts for PID initial value holding time (PA-22), PID starts close-loop regulate calculating.

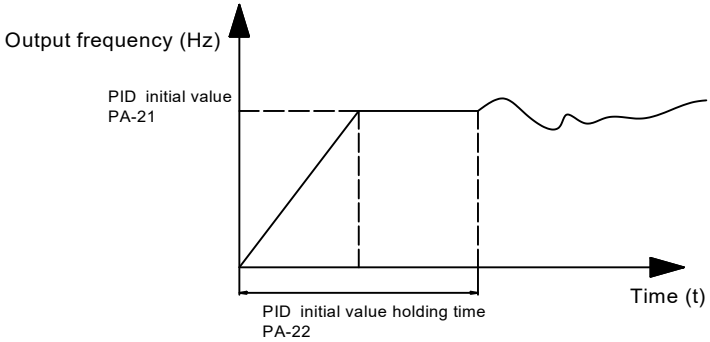

Figure 6-26 PID initial value function diagram

PA-23	Forward maximum value between two output deviation		Factory default	1.00%
	Setting range	0.00% ~ 100.00%		
PA-24	Reverse maximum value between two output deviation		Factory default	1.00%
	Setting range	0.00% ~ 100.00%		

This function is used to limit the difference between PID output two bats (2ms/bat), so as to against PID output changing too fast, make the inverter run stably.

PA-23 and PA-24 correspond to the maximum of the output deviation absolute value when forward and reverse, respectively.

PA-25	PID integration attribute		Factory default	00
	Setting range	Units place	Integration separate	
		0	Invalid	
		1	Valid	
		Tens place	Stop integrating or not after output reaches limit	
		0	Continue integrating	
		1	Stop integrating	

Integration separation:
If integration separation is valid, when multifunctional digital DI integration pause (function 22) is valid, PID integration stop calculating, PID is only valid when proportional and differential action.
When integration separation is invalid, whatever multifunctional digital DI is valid or not, integration separation is invalid.
Stop integrating or not after output reach limit:
After PID calculation output reaches the maximum or minimum, whether stop integral action or not can be selected. If the selection is stop integrating, PID integration will stop calculating, which may help to reduce PID overshoot.

PA-26	PID feedback lost detection value		Factory default	0.0%
	Setting range	0.0%: No judgment for feedback lost 0.1% ~ 100.0%		
PA-27	PID feedback lost detection time		Factory default	1.0s
	Setting range	0.0s ~ 20.0s		

The parameters are used to judge whether PID feedback lost or not.

When PID feedback is smaller than feedback lost detection value (PA-26), lasts for longer than PID feedback lost detection time (PA-27), the inverter alarms fault E-31, and handles according to the chose fault process mode.

PA-28	PID stop calculation		Factory default	1
	Setting range	0	No calculation when stop	
		1	Calculation when stop	

This parameter is used to select PID stop status & whether PID continues calculating or not. For normal applications, PID should stop calculating when stop.

Group PB Wobble Frequency, Fixed Length, Counting

The wobble frequency function is suitable for textile, chemical fiber industries, and the applications which require traversing and winding functions.

The wobble frequency function means that the output frequency of the inverter wobbles up and down with the setting frequency as the center. The trace of running frequency at the time axis is shown in the figure below, of which the wobble amplitude is set by PB-00 and PB-01. When PB-01 is set to 0, indicating the wobble amplitude is 0, the wobble frequency is disabled.

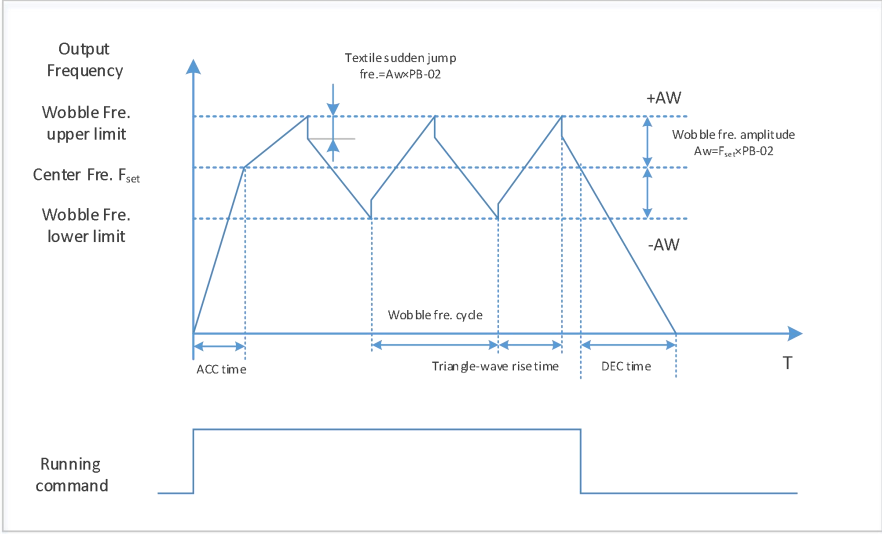

Figure 6-27 Wobble frequency operation diagram

PB-00	Wobble frequency amplitude setting mode		Factory default	0
	Setting range	0	Relative to the center frequency	
		1	Relative to maximum frequency	

This parameter is used to select the reference value of the wobble amplitude.

0: Relative to the center frequency (P0-07: frequency source selection), and it is variable wobble amplitude system. The wobble amplitude changes with the center frequency (setting frequency).

1: Relative to the maximum frequency (P0-10) and it is fixed wobble amplitude system. The wobble amplitude is fixed.

PB-01	Wobble frequency amplitude		Factory default	0.0%
	Setting range	0.0% ~ 100.0%		
PB-02	Sudden jump frequency amplitude		Factory default	0.0%
	Setting range	0.0% ~ 50.0%		

This parameter is used to determine the values of wobble amplitude and sudden jump frequency. The wobble frequency is limited by the frequency upper limit and frequency lower limit.

The wobble amplitude is relative to the central frequency (variable wobble amplitude, select PB-00=0): wobble amplitude: AW=frequency source: P0-07 × wobble amplitude: PB-01.
The wobble amplitude is relative to the maximum frequency (fixed wobble amplitude, select PB-00=1): wobble amplitude: AW=maximum frequency: P0-10 × wobble amplitude: PB-01.
Sudden jump frequency=wobble amplitude: AW × sudden jump frequency amplitude: PB-02. That is the value of sudden jump frequency relative to the wobble amplitude when the wobble frequency is running.
If the wobble amplitude relative to the central frequency (variable wobble amplitude, select PB-00=0) is selected, the sudden jump frequency is a variable value.
If the wobble amplitude relative to the maximum frequency (fixed wobble amplitude, select PB-00=1) is selected, the sudden jump frequency is a fixed value.

PB-03	Wobble frequency cycle		Factory default	10.0s
	Setting range	0.1s ~ 3000.0s		
PB-04	Triangle-wave rise time of wobble frequency		Factory default	50.0%
	Setting range	0.1% ~ 100.0%		

Wobble frequency cycle: It refers to the time of a complete cycle of wobble frequency.
PB-04 is relative to the percentage of PB-03.
Triangular wave rise time = PB-03 × PB-04 (unit: s)
Triangular wave fall time = PB-03 × (1-PB-04) (unit: s)

PB-05	Setting length		Factory default	1000m
	Setting range	0m ~ 65535m		
PB-06	Actual length		Factory default	0m
	Setting range	0m ~ 65535m		
PB-07	Number of pulses per meter		Factory default	100.0
	Setting range	0.1 ~ 6553.5		

The parameters are used in fixed length control.
Length information can be collected via input terminals, PB-06= the collected number of pulses/PB-07. When PB-06 is longer than PB-05, DO outputs “length arrival” ON signal.
During fixed length control, length reset operation can be done by set DI terminal function to 28, refers to P4-00~P4-06 for details.
The relative input terminal function need to be set to 27 (length counting input) for applications, HDI must be used when the pulse frequency is high.

PB-08	Setting counting value		Factory default	1000
	Setting range	1 ~ 65535		
PB-09	Designated counting value		Factory default	1000
	Setting range	1 ~ 65535		

The counting value can be collected via digital input terminals. The relative input terminal function need to be set to 25 (Counter input) for applications, HDI must be used when the pulse frequency is high.

When the counting value reaches PB-08, DO outputs “setting counting value arrival” ON signal, then the counter will stop counting.
When the counting value reaches PB-09, DO outputs “designated counting value” ON signal. The counter will continue counting till the “setting counting value” is reached.
PB-09 should not exceed PB-08.

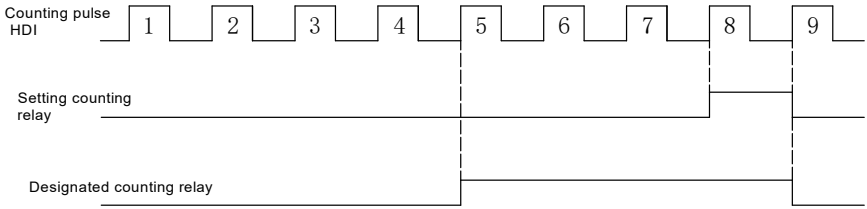

Figure 6-28 Setting counting value arrival and designated counting value arrival function diagram

Group PC Multi-step Command and Simple PLC Function

The multi-step command of 300A/300 series inverter has more functions than normal multi-step speed. Besides multi-step speed functions, it can be used as the given source of the process PID.

PC-00	Multi-step command 0	Factory default	0.0%
	Setting range	-100.0% ~ 100.0%	
PC-01	Multi-step command 1	Factory default	0.0%
	Setting range	-100.0% ~ 100.0%	
PC-02	Multi-step command 2	Factory default	0.0%
	Setting range	-100.0% ~ 100.0%	
PC-03	Multi-step command 3	Factory default	0.0%
	Setting range	-100.0% ~ 100.0%	
PC-04	Multi-step command 4	Factory default	0.0%
	Setting range	-100.0% ~ 100.0%	
PC-05	Multi-step command 5	Factory default	0.0%
	Setting range	-100.0% ~ 100.0%	
PC-06	Multi-step command 6	Factory default	0.0%
	Setting range	-100.0% ~ 100.0%	
PC-07	Multi-step command 7	Factory default	0.0%
	Setting range	-100.0% ~ 100.0%	
PC-08	Multi-step command 8	Factory default	0.0%
	Setting range	-100.0% ~ 100.0%	
PC-09	Multi-step command 9	Factory default	0.0%
	Setting range	-100.0% ~ 100.0%	
PC-10	Multi-step command 10	Factory default	0.0Hz
	Setting range	-100.0% ~ 100.0%	
PC-11	Multi-step command 11	Factory default	0.0%
	Setting range	-100.0% ~ 100.0%	
PC-12	Multi-step command 12	Factory default	0.0%
	Setting range	-100.0% ~ 100.0%	
PC-13	Multi-step command 13	Factory default	0.0%
	Setting range	-100.0% ~ 100.0%	
PC-14	Multi-step command 14	Factory default	0.0%
	Setting range	-100.0% ~ 100.0%	
PC-15	Multi-step command 15	Factory default	0.0%
	Setting range	-100.0% ~ 100.0%	

Multi-step command can be used in two situations: as frequency source or as the setting source of the process PID.

In two situations, the dimension of the multi-step command is relative value, range -100.0%~100.0%, When as the frequency source is the percentage of the relative maximum frequency, multi-step command as PID setting source does not need dimension switching, because PID given is relative value. Multi-step command switches selection according to the different status of multifunctional digital D, please refer to P4 group for details.

PC-16	PLC running mode		Factory default	0
	Setting range	0	Stop after one cycle	
		1	Keep last frequency after one cycle	
		2	Circular running	

When frequency source is set by simple PLC, the symbols of PC-00 ~ PC-15 determines the running direction, the inverter run reverse if they are negative values.

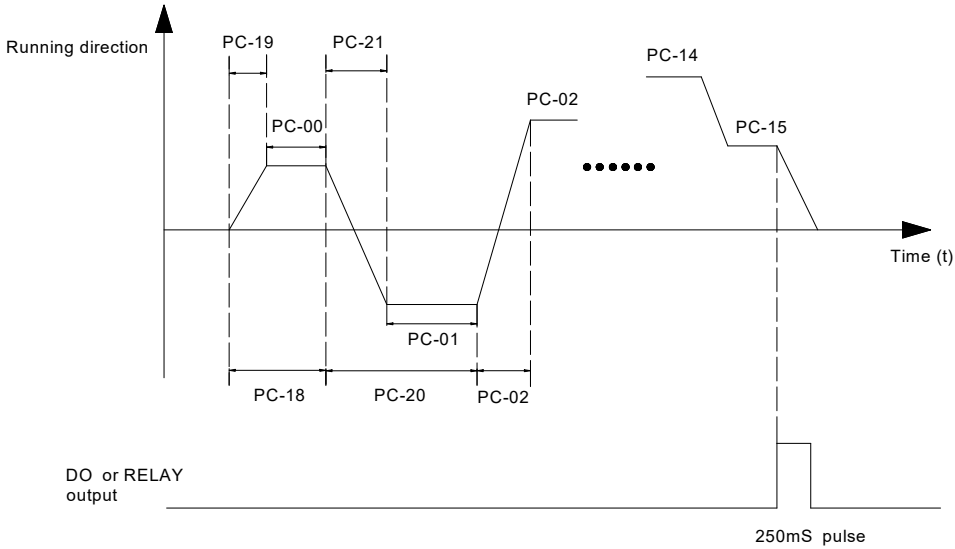

Figure 6-29 Simple PLC diagram

0: Stop after one cycle: Inverter stops automatically as soon as it completes one cycle, and It needs run command to start again.

1: keep last frequency after one cycle: Inverter holds frequency and direction of last phase after one cycle.

2: Circular running: Inverter continues to run cycle by cycle until receive a stop command.

PC-17	Simple PLC storage selection when power-down		Factory default	00
	Setting range	Units place	When power-off	
		0	Not store	
		1	Store	
		Tens place	When stop	
		0	No store	
		1	Store	

PLC storage when power-off means the last PLC running phase and running frequency are memorized before power-off, keep running from the memory status after power-on next time.
When selection is “not store”, restart PLC process after power-on each time.
“PLC storage when stop” means the last PLC running phase and running frequency are memorized when stopping, keep running with the memory status after power-on next time. When selection is “not store”, restart PLC process after power-on each time.

PC-18	0th phase running time	Factory default	0.0s (m)
	Setting range	0.0s (m) ~ 6500.0s (m)	
PC-19	0th Phase ACC/DEC time selection	Factory default	0
	Setting range	0 ~ 3	
PC-20	1st Phase running time	Factory default	0.0s (m)
	Setting range	0.0s (m) ~ 6500.0s (m)	
PC-21	1st Phase ACC/DEC time selection	Factory default	0
	Setting range	0 ~ 3	
PC-22	2nd Phase running time	Factory default	0.0s (m)
	Setting range	0.0s (m) ~ 6500.0s (m)	
PC-23	2nd Phase ACC/DEC time selection	Factory default	0
	Setting range	0 ~ 3	
PC-24	3rd Phase running time	Factory default	0.0s (m)
	Setting range	0.0s (m) ~ 6500.0s (m)	
PC-25	3rd Phase ACC/DEC time selection	Factory default	0
	Setting range	0 ~ 3	
PC-26	4th Phase running time	Factory default	0.0s (m)
	Setting range	0.0s (m) ~ 6500.0s (m)	
PC-27	4th Phase ACC/DEC time selection	Factory default	0
	Setting range	0 ~ 3	

PC-28	5th Phase running time	Factory default	0.0s (m)
	Setting range	0.0s (m) ~ 6500.0s (m)	

PC-29	5th Phase ACC/DEC time selection	Factory default	0
	Setting range	0 ~ 3	
PC-30	6th Phase running time	Factory default	0.0s (m)
	Setting range	0.0s (m) ~ 6500.0s (m)	
PC-31	6th Phase ACC/DEC time selection	Factory default	0
	Setting range	0 ~ 3	
PC-32	7th Phase running time	Factory default	0.0s (m)
	Setting range	0.0s (m) ~ 6500.0s (m)	
PC-33	7th Phase ACC/DEC time selection	Factory default	0
	Setting range	0 ~ 3	
PC-34	8th Phase running time	Factory default	0.0s (m)
	Setting range	0.0s (m) ~ 6500.0s (m)	
PC-35	8th Phase ACC/DEC time selection	Factory default	0
	Setting range	0 ~ 3	
PC-36	9th Phase running time	Factory default	0.0s (m)
	Setting range	0.0s (m) ~ 6500.0s (m)	
PC-37	9th Phase ACC/DEC time selection	Factory default	0
	Setting range	0 ~ 3	
PC-38	10th Phase running time	Factory default	0.0s (m)
	Setting range	0.0s (m) ~ 6500.0s (m)	
PC-39	10th Phase ACC/DEC time selection	Factory default	0
	Setting range	0 ~ 3	
PC-40	11th Phase running time	Factory default	0.0s (m)
	Setting range	0.0s (m) ~ 6500.0s (m)	
PC-41	11th Phase ACC/DEC time selection	Factory default	0
	Setting range	0 ~ 3	
PC-42	12th Phase running time	Factory default	0.0s (m)
	Setting range	0.0s (m) ~ 6500.0s (m)	
PC-43	12th Phase ACC/DEC time selection	Factory default	0
	Setting range	0 ~ 3	
PC-44	13th Phase running time	Factory default	0.0s (m)
	Setting range	0.0s (m) ~ 6500.0s (m)	
PC-45	13th Phase ACC/DEC time selection	Factory default	0
	Setting range	0 ~ 3	
PC-46	14th Phase running time	Factory default	0.0s (m)
	Setting range	0.0s (m) ~ 6500.0s (m)	

PC-47	14th Phase ACC/DEC time selection		Factory default	0
	Setting range		0 ~ 3	
PC-48	15th Phase running time		Factory default	0.0s (m)
	Setting range		0.0s (m) ~ 6500.0s (m)	
PC-49	15th Phase ACC/DEC time selection		Factory default	0
	Setting range		0 ~ 3	
PC-50	PLC running time unit		Factory default	0
	Setting range	0	s (second)	
		1	h (hour)	
PC-51	Multi-step command 0 given mode		Factory default	0
	Setting range	0	PC-00	
		1	AI1	
		2	AI2	
		3	Keypad potentiometer	
		4	HDI High speed pulse HDI	
		5	PID control	
		6	Keypad setting frequency (P0-08), UP/DN can be modified	

The given channel of multi-step command 0 is determined by this parameter.

Multi-step command 0 has many selections besides PC-00, which is conveniently for switching between multi-step command and other given modes. When the frequency source is set by multi-step command or simple PLC, it can achieve switching two frequency sources easily.

Group PD Communication Parameters

Refer to the Communication Protocol for details.

Group PP Function Code Management

PP-00	User password	Factory default	0
	Setting range	0 ~ 65535	

Any non-zero number can be set, and then the password protection function will be enabled. When user enters into the menu next time, "-----" will be displayed, please input the right password, otherwise the parameters cannot be checked or modified.
0000: Clear the previous password and disable the password protection function.

PP-01	Parameter initialization		Factory default	0
	Setting range	0	No operation	
		1	Restore factory default, but not including motor parameters	
		2	Clear the fault record	

1. Restore to factory default, but not including motor parameters.
After PP-01 is set to 1, most of the inverter function parameters are restored to the factory default settings, except motor parameters, frequency command decimal place (P0-22), fault record information, accumulated running time (P7-09), accumulated power on time (P7-13), accumulated power consumption (P7-14).
2. Clear the record information.
Clear the fault record information, accumulated running time (P7-09), accumulated power on time (P7-13), accumulated power consumption (P7-14).

PP-02	Function parameter group display selection		Factory default	00
	Setting range	Units	U0 group display selection	
		0	No display	
		1	Display	
		Tens	A0 group display selection	
		0	No display	
		1	Display	
PP-03	Reserved			

The setting of parameter display mode is convenient for users to view the function parameter of different spread patterns according to the actual demand.

PP-04	Function code modification attribute		Factory default	0
	Setting range	0	Valid	
		1	Invalid	

The customer setting function code parameter can be modified or not, is used to protect function parameter being modified improperly.
When the function code is set to 0, all the function codes can be modified, when the function code is set to 1, all the function codes only can be viewed, but not modified.

Group A0 Torque Control Parameters

A0 group defaults to the hidden parameter group, the display attribute of A0 group can be modified via setting PP-02, please refer to PP-02 for details.

A0-00	Speed/torque control mode selection		Factory default	0
	Setting range	0	Speed control	
		1	Torque control	

It is used to select the inverter control mode: speed control or torque control.
P0-01 (control mode) must be set to 1 (sensorless vector control) if you need to use torque control.
Multifunctional digital DI terminal has two functions related with torque control: torque control prohibit (function 29), speed control/torque control switching (function 46). The two terminals need to be matched up with A0-00 to switch speed control and torque control.
When speed control/torque control switching terminal is invalid, the control mode is determined by A0-00.
When speed control/torque control switching terminal is valid, the control mode is determined by A0-00 value reverse.
When torque control prohibit terminal is valid, the control mode is speed control.

A0-01	Torque setting source selection in torque control mode		Factory default	0
	Setting range	0	Keypad (A0-03)	
		1	AI1	
		2	AI2	
		3	Keypad potentiometer	
		4	High speed pulse HDI	
		5	Communication	
		6	MIN (AI1,AI2)	
		7	MAX (AI1,AI2)	
A0-03	Torque keypad setting in torque control mode		Factory default	150.0%
	Setting range	-200.0% ~ 200.0%		

A0-01 is used to select torque setting source including 8 torque setting mode.
Torque setting adopts relative value, 100.0% corresponds to the rated torque, range: -200.0%~200.0%, means the maximum torque is 2 times rated torque.
When torque setting is 1~7, 100% of communication, analog input, pulse input corresponds to A0-03

A0-04	Torque filter time		Factory default	0.00
	Setting range	0.00s ~ 10.00s		

Torque filter time is used to set torque software filter time, when the rapid torque response is needed, please reduce torque filter time. When the smooth torque control is needed, please increase the torque filter time. And the longer filter time is, the slower torque response is.

A0-05	Torque control forward maximum frequency		Factory default	50.00Hz
	Setting range	0.00Hz ~ P0-10 (maximum frequency)		
A0-06	Torque control reverse maximum frequency		Factory default	50.00Hz
	Setting range	0.00Hz ~ P0-10 (maximum frequency)		

It is used to set forward or reverse maximum running frequency in torque control.
When torque control, if the load torque is smaller than the motor output torque, the motor speed will increase, and the motor maximum speed should be limited to protect mechanical system from galloping or other accidents.

A0-07	Torque control acceleration time		Factory default	0.00s
	Setting range	0.00s ~ 36000s		
A0-08	Torque control deceleration time		Factory default	0.00s
	Setting range	0.00s ~ 36000s		

The speed variation rate of the motor and load is determined by the difference between the motor output torque and the load torque in torque control mode. So the motor speed may change rapidly, and causes noise or mechanical stress too big, etc. The motor speed can change smoothly via setting torque control ACC/DEC time.
Torque control ACC/DEC time should be set to 0.00s for the application which needs torque responding rapidly.
For example: two motors drag one load by hard wiring, to make sure uniform distribution of loading, one inverter is set to the master & adopts speed control mode, the other is set to the slave & adopts torque control. The torque command of the slave is set to the actual output torque of the master, the slave torque needs to follow the master rapidly, then the torque control ACC/DEC time should be set to 0.00s.

Group A9 Special Function

If need to use this parameter group, please set PP-02 to be 11.

A9-00	Water supply function			Factory default	0
	Setting range	0	Disable		
		1	Enable		

After enabling this function, combining with the PID group, it can realize the constant pressure water supply function that an inverter drives 4 pumps.

A9-01	Auxiliary pump 1			Factory default	0
	Setting range	0	Disable		
		1	Enable		
A9-02	Auxiliary pump 1 Start and stop delay			Factory default	0
	Setting range	0.0～3600.0S			
A9-03	Auxiliary pump 2			Factory default	0
	Setting range	0	Disable		
		1	Enable		
A9-04	Auxiliary pump 2 Start and stop delay			Factory default	0
	Setting range	0.0～3600.0S			
A9-05	Auxiliary pump 3			Factory default	0
	Setting range	0	Disable		
		1	Enable		
A9-06	Auxiliary pump 3 Start and stop delay			Factory default	0
	Setting range	0.0～3600.0S			

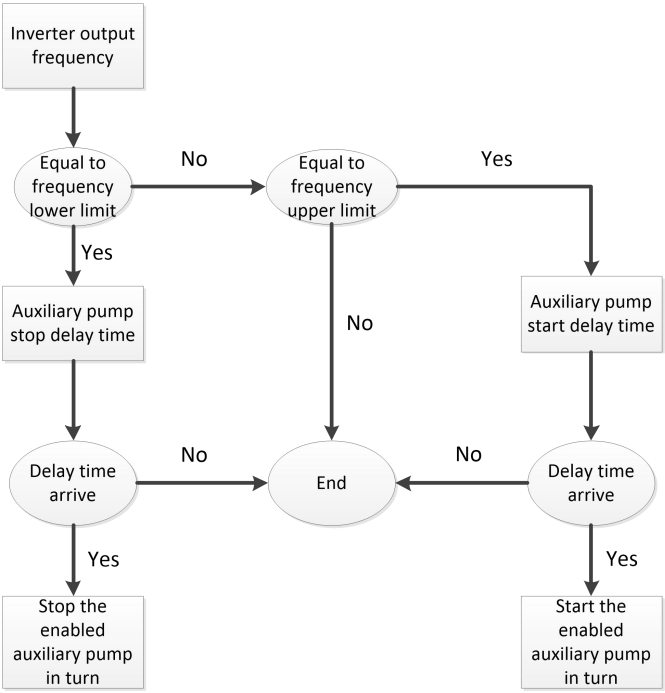

Figure 6-30 Constant pressure water supply logic diagram

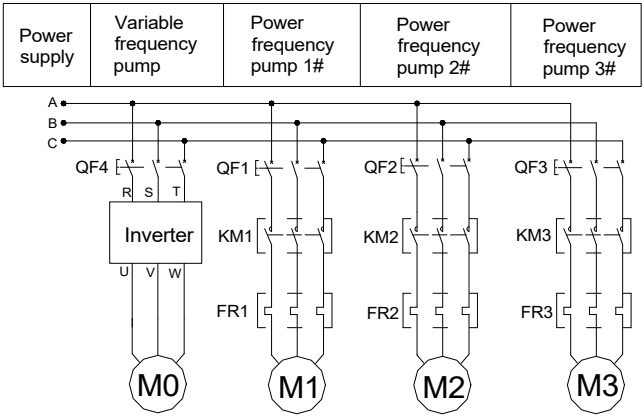

Figure 6-31 Constant pressure water supply wiring diagram

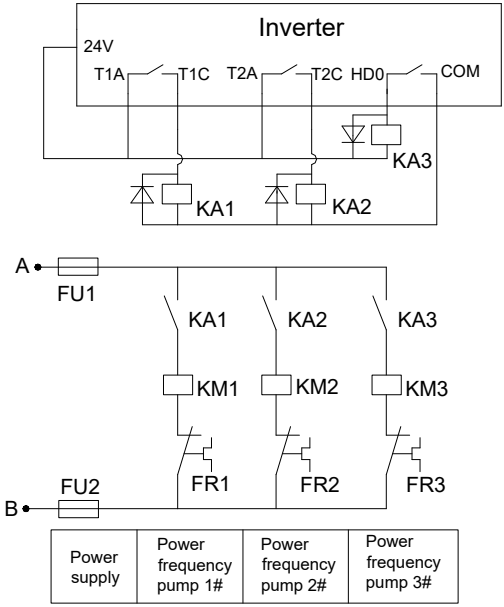

Figure 6-32 Constant pressure water supply electrical schematic diagram

When the inverter running frequency reaches the upper limit frequency and after a certain delay, the T1 relay closes the output, the KM1 contactor closes, and the 1# power frequency pump starts and runs at the power frequency directly. If the pressure is not enough, the inverter running frequency continues to reach the upper limit frequency, and the cycle starts 2# and 3# power frequency pumps.

When the inverter running frequency reaches the lower limit frequency and after a certain delay, the corresponding last started power frequency pump stops working, and the principle is first start and then stop.

A9-07	Double-speed over-current stall action current compensation coefficient		Factory default	40%
	Setting range	40%～200%		

In the high frequency region, the motor driving current is smaller, when below the rated frequency, and with the same stall current, the speed of motor drops greatly. In order to improve the operating characteristics of the motor, the stall action current above the rated frequency can be reduced. In some applications like centrifuge, the operating frequency is high, requiring several times of weak magnetic field and large load inertia, this method has a good effect on the acceleration performance.
Over-current stall action current when exceeding the rated frequency = (fs / fn) * k * LimitCur;
fs is the running frequency, fn is the motor rated frequency, k is A9-07 " double-speed over-current stall action current compensation coefficient ", and LimitCur is P9-06 " over-current stall action current”.

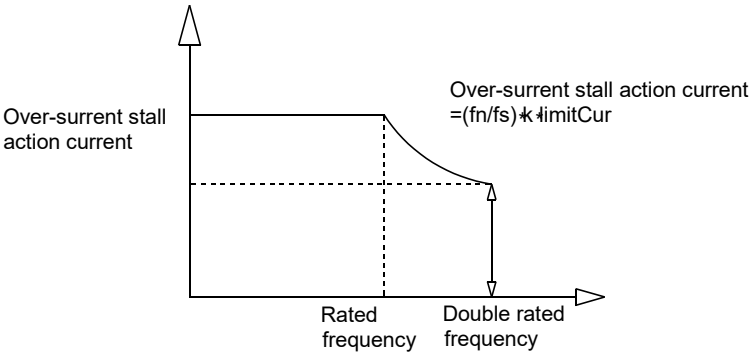

Figure 6-33 Double-speed over-current stall action diagram

Note:

1. Over-current stall action current 180% means 1.8 times of the rated current of inverter;
2. For high-power motors with carrier frequency below 2 kHz, due to the increasing of the pulse current, the wave-by-wave current-limit response starts before the over-current stall action, and the torque is insufficient. In this case, reduce the over-current stall action current.

A9-08	PID double-speed coefficient		Factory default	1
	Setting range	1～200		

PID adjustment is too slow in some applications, adjust this parameter, PID output value = the original PID output value * this parameter.

A9-09	AO1 output analog signal selection		Factory default	0
	Setting range	0	0-10V	
		1	4-20mA	
A9-10	AO2 output analog signal selection		Factory default	0
	Setting range	0	0-10V	
		1	4-20mA	

If the field needs 4mA ~ 20mA analog output, the corresponding signal source for AO1, AO2 output analog signal (A9-09, A9-10) need to be selected, no need to set the zero-offset coefficient (P5-10、P5-12). The analog output deviation is corrected by the corresponding P5-11 and P5-13 gains.

Group U0 Monitoring Parameters

For the convenience of the field debugging, U0 group indicates running status of inverter. User can view them on the keypad.

Code	Name	Range
U0-00	Running frequency	0.00 ～ 320.00Hz (P0-22=2)
U0-01	Setting frequency	0.0 ～ 3200.0Hz (P0-22=1)

U0-00 displays absolute value of theoretical running frequency of the inverter.
U0-01 displays absolute value of setting frequency of the inverter.
The actual output frequency of inverter refers to U0-19.

Code	Name	Range
U0-02	DC bus voltage	0.0V ～ 3000.0V

U0-02 displays the voltage of DC bus.

Code	Name	Range
U0-03	Output voltage	0V ～ 1140V

U0-03 displays the output voltage of inverter at run time.

Code	Name	Range
U0-04	Output current	0.00A ～ 655.35A (Rated Power ≤ 55kW) 0.0A ～ 6553.5A (Rated Power > 55kW)

U0-04 displays the output current of inverter at run time.

Code	Name	Range
U0-05	Output power	0 ～ 32767

U0-05 displays the output power of inverter at run time.

Code	Name	Range
U0-06	Output torque	-200.0% ～ 200.0%

U0-06 displays the output torque of inverter at run time.

Code	Name	Range
U0-07	DI input status	0 ～ 32767

U0-07 displays the digital value Input terminal state which can be expressed by a 8-bit binary code; if the inverter detects that the input of corresponding terminal is high level(closed), then this bit is set to "1", if the input of corresponding terminal is low level(open), then the bit is set to "0". The relationship between Digital value Input terminal and binary code is shown below.

Bit0	Bit1	Bit2	Bit3
DI1	DI2	DI3	DI4
Bit4	Bit5	Bit6	Bit7
DI5	DI6	DI7	-

Code	Name	Range
U0-08	DO output status	0 ～ 1023

U0-07 displays the digital value output terminal state which can be expressed by a 8-bit binary code; if the inverter detects that the output of corresponding terminal is high level (closed), then this bit is set to "1", if the output of corresponding terminal is low level (open), then the bit is set to "0". The relationship between Digital value output terminal and binary code is shown below.

Bit0	Bit1	Bit2	Bit3
DO3	Relay 1	Relay 2	DO1
Bit4	Bit5	Bit6	Bit7
DO2	-	-	-

Code	Name	Range
U0-09	AI1 Voltage	-10 ～ 10V

U0-09 displays the input voltage of AI1.

Code	Name	Range
U0-10	AI2 Voltage	-10 ～ 10V

U0-10 displays the input voltage of AI2.

Code	Name	Range
U0-11	Radiator temperature	-20 ～ 100℃

U0-11 displays the current temperature of radiator.

Code	Name	Range
U0-12	Count value	-

U0-12 displays the current value of counter.

Code	Name	Range
U0-13	Length value	-

U0-13 displays the current value of length.

Code	Name	Range
U0-14	Load speed	0 ～ 65535

U0-14 displays the speed of load. Refer to the description of P7-12 in user manual.

Code	Name	Range
U0-15	PID setting	0 ～ 65535
U0-16	PID feedback	0 ～ 65535

U0-15 displays the setting value of PID.
U0-16 displays the feedback value of PID.
Take the following formulas as follows:
The setting value of PID= the setting (percentage) of PID × PA-04
The feedback value of PID=the feedback (percentage) of PID × PA-04

Code	Name	Range
U0-17	PLC phase	0 ～ F

U0-14 displays the current step when inverter is running in simple PLC mode.
The relationship between displayed value and current step is shown below.

Displayed value	Inverter is running at step X:
1	X:0
2	X:1
……	……
F	X:15

Code	Name	Range
U0-18	HDI input pulse fre.	0.00 ～ 100.0KHz

U0-18 displays the sampling frequency of High-speed-pulse input (HDI). The smallest unit is 0.01 KHz.

Code	Name	Range
U0-19	Feedback speed	-320.00 ～ 320.00Hz -3200.0 ～ 3200.0Hz

U0-19 displays the actual output frequency of inverter:
When P0-22 is set to 1, the range is -3200.0 to 3200.0. (Unit: Hz)
When P0-22 is set to 2, the range is -320.00 to 320.00. (Unit: Hz)

Code	Name	Range
U0-20	Remain running time	0.0 ～ 6500.0min

U0-20 displays remain running time when inverter is running at timing running mode. (Refer to P8-42,

P8-43 and P8-44).

Code	Name	Range
U0-21	AI1 voltage before calibration	0.00 ～ 10.57V
U0-22	AI2 voltage before calibration	0.00 ～ 10.57V
U0-23	Keypad potentiometer voltage before calibration	0.00 ～ 10.57V

U0-21 displays the sampling voltage of analog input 1(AI1).
U0-22 displays the sampling voltage of analog input 2(AI2).
The actual input voltage is corrected value after linear calibration, so as to reduce the deviation between sampling voltage and the actual input voltage.
U0-09 and U0-10 display the actual voltages.

Code	Name	Range
U0-24	linear velocity	0 ～ 65535m/min

U0-24 displays the sampling linear velocity of High-speed-pulse input (HDI). The unit is meter per minute (m/min).
It can be calculated according to number of the actual sampling pulse and PB-07(number of pulse per meter).

Code	Name	Range
U0-27	HDI input pulse fre.	0 ～ 65535Hz

U0-27 displays the sampling frequency of High-speed-pulse input (HDI). The unit is 1 Hz. Actually, U0-27 displays the same data with U0-18. The only difference is the unit.

Code	Name	Range
U0-28	Communication setting value	-100 ～ 100%

U0-28 displays the data written to address 0X1000.

Code	Name	Range
U0-29	Reserved	-

Code	Name	Range
U0-30	Main fre. A display	0.00 ～ 320.00Hz

U0-30 displays the frequency of main reference-input-channel (Refer to P0-03).
When P0-22 is set to 1, the range is -3200.0 to 3200.0 (Unit: Hz).
When P0-22 is set to 2, the range is -320.00 to 320.00 (Unit: Hz).

Code	Name	Range
U0-31	Auxiliary fre. B display	0.00 ～ 320.00Hz

U0-31 displays the frequency of auxiliary reference-input-channel (Refer to P0-04).
When P0-22 is set to 1, the range is -3200.0 to 3200.0 (Unit: Hz).
When P0-22 is set to 2, the range is -320.00 to 320.00 (Unit: Hz).

Code	Name	Range
U0-32	Reserved	-
U0-33	Reserved	-

Code	Name	Range
U0-34	Motor temperature	0 ～ 200℃

U0-43 displays the current temperature of motor.
NOTE: This code is reserved (not available in present).

Code	Name	Range
U0-35	Target torque	-200 ～ 200%

U0-43 displays the current upper limit setting of torque. Refer to P2-09 and P2-10.

Code	Name	Range
U0-36	Reserved	-

Code	Name	Range
U0-37	Power factor angle	-

U0-43 displays the current power factor angle.

Code	Name	Range
U0-38	Reserved	-
U0-39	Reserved	-
U0-40	Reserved	-

Code	Name	Range
U0-41	Input status visual display	-

U0-41 displays the input terminal state on the keypad intuitively.

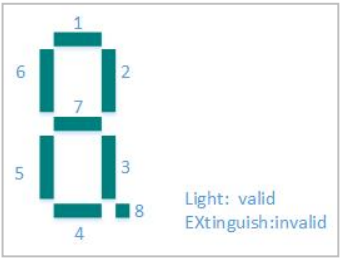

Take the description for reference:

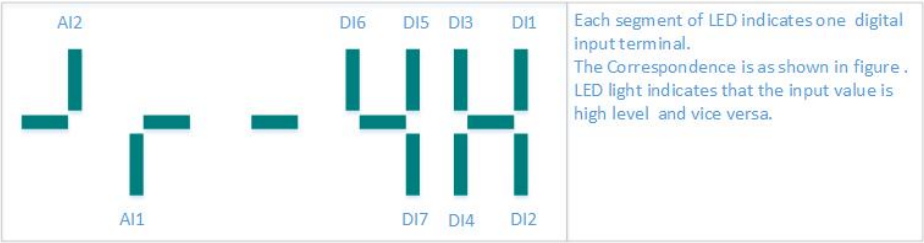

Code	Name	Range
U0-42	DO input status visual display	-

U0-42 displays the digital value output terminal state on the keypad intuitively.

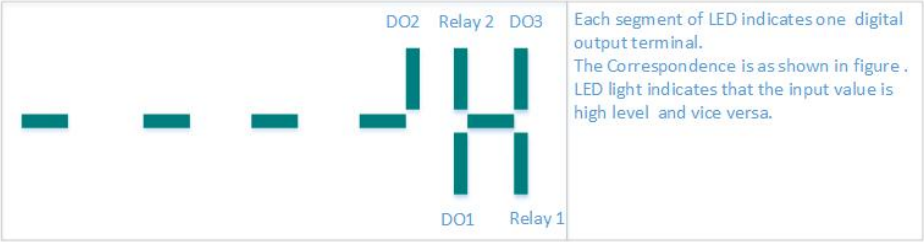

Code	Name	Range
U0-43	DO input status visual display 1	-

U0-43 displays whether intuitive display function 1-40 are valid or not.

There are 5 digital tubes on keypad. Every digital tube has 8 segments, and each segment indicates a certain function selection.

Define digital tube as shown in figure.

Digital tubes from left to right represent intuitive display function 1-8, 9-16, 7-24, 25-32, 33-40.

Code	Name	Range

U0-44	DI input status visual display 2	-

U0-44 displays whether intuitive display function 41-59 are valid or not.
There are 5 digital tubes on keypad. Every digital tube has 8 segments, and each segment indicates a certain function selection. Digital tubes from left to right represent intuitive display function 41-48, 49-56, 57-59.
NOTE: U0-33 and U0-34 are testing codes for manufacturers.

Code	Name	Range
U0-45	Reserved	-
……	……	-
U0-58	Reserved	-

Code	Name	Range
U0-59	Setting frequency	-100% ~ 100%
U0-60	Running frequency	-100% ~ 100%

U0-59 displays current setting frequency.
U0-60 displays current running frequency.
100% is corresponding to Max. frequency (P0-10).

Code	Name	Range
U0-61	Inverter status	0 ~ 65535

U0-61 displays information of inverter running status. Take the following as reference.

U0-61		
Combination of bit 0 & bit 1	Combination of bit 2 & bit 3	Bit4
0: stop 1:Forward 2:Reverse	0: constant speed 1: acceleration 2:Deceleration	0: The voltage of DC bus is normal 1: under voltage

NOTE: A digital tube is corresponding to one bit above.

Chapter 7 EMC (Electromagnetic Compatibility)

7.1 Definition

Electromagnetic compatibility is the ability of the electric equipment to work in the electromagnetic interference environment and implement its function stably without interferences in the electromagnetic environment.

7.2 EMC Standard Description

In accordance with the requirements of the national standard GB/T12668.3, the inverter needs to comply with electromagnetic interference and anti-electromagnetic interference requirements.

Products apply the latest international standard—IEC/EN61800-3: 2004 (Adjustable speed electrical power drive systems part 3: EMC requirements and specific test methods), which is equivalent to the national standard GB/T12668.3.

IEC/EN61800-3 assesses the inverter in terms of electromagnetic interference and anti-electronic interference. Electromagnetic interference mainly tests the radiation interference, conduction interference and harmonics interference on the inverter (required for the inverter for civil use). Anti-electromagnetic interference mainly tests the conduction interference rejection, radiation interference rejection, surge interference rejection, fast and mutable pulse group interference rejection, ESD interference rejection and power low frequency end interference rejection (specific test items including: 1. Interference rejection tests of input voltage sag, interrupt and change; 2. Phase conversion interference rejection test; 3. Harmonic input interference rejection test; 4. Input frequency change test; 5. Input voltage unbalance test; 6. input voltage fluctuation test).

The tests should be conducted strictly in accordance with the above requirements of IEC/ EN61800-3, and the products of our company are installed and used according to Section 7.3 and have good electromagnetic compatibility in general industry environment.

7.3 EMC Guide

7.3.1 Harmonic effect

Higher harmonics of power supply may damage the inverter. Thus, at some places where mains quality is rather poor, it is recommended to install AC input reactor.

7.3.2 Electromagnetic interference and installation precautions

There are two kinds of electromagnetic interferences, one is interference of electromagnetic noise in the surrounding environment on the inverter, and the other is interference of inverter on the surrounding equipment.

Installation precautions:

1) The earth wires of the Inverter and other electric products should be well grounded;

2) The power input and output power cables of the inverter and weak current signal cables (e.g. control line) should not be arranged in parallel and vertical arrangement is preferable.

3) It is recommended that the output power cables of the inverter employ shield cables or steel pipe shielded cables and that the shielding layer be earthed reliably. The lead cables of the equipment suffering interferences are recommended to employ twisted-pair shielded control cables, and the shielding layer should be earthed reliably.

4) When the length of motor cable is longer than 100 meters, it needs to install output filter or reactor.

7.3.3 Handling method for the interferences of the surrounding equipment on the inverter

The electromagnetic interference on the inverter is generated because plenty of relays, contactors and electromagnetic brakes are installed near the inverter. When the inverter has error action due to the interferences, the following measures can be taken:

1) Install surge suppressor on the devices generating interference;

2) Install filter at the input end of the inverter. Refer to Section 7.3.6 for the specific operations;

3) The lead cables of the control signal cable of the inverter and the detection line employ shielded cable and the shielding layer should be earthed reliably.

7.3.4 Handling method for the interferences of inverter on the surrounding equipment

These interferences include two types: one is radiation interference of the inverter, and the other is conduction interference of the inverter. These two types of interferences cause the surrounding electric equipment to suffer electromagnetic or electrostatic induction. The surrounding equipment hereby produces error action. For different interferences, it can be handled by referring to the following methods:

1) For the measuring meters, receivers and sensors, their signals are generally weak. If they are placed nearby the inverter or together with the inverter in the same control cabinet, they are easy to suffer interference and thus generate error actions. It is recommended to handle with the following methods: Put in places far away from the interference source; do not arrange the signal cables with the power cables in parallel and never bind them together; both the signal cables and power cables employ shielded cables and are well earthed; install ferrite magnetic ring (with suppressing frequency of 30 to 1,000MHz) at the output side of the inverter and wind it 2 to 3 cycles; install EMC output filter in more severe conditions.

2) When the equipment suffering interferences and the inverter use the same power supply, it may cause conduction interference. If the above methods cannot remove the interference, it should install EMC filter between the inverter and the power supply (refer to Section 7.3.6 for the prototyping operation); the surrounding equipment is separately earthed, which can avoid the interference caused by the leakage current of the inverter’s earth wire when common earth mode is adopted.

3) The surrounding equipment is separately earthed, which can avoid the interference caused by the leakage current of the inverter’s earth wire when common earth mode is adopted.

7.3.5 Leakage current and handling

There are two forms of leakage current when using the inverter. One is leakage current to the earth, and the other is leakage current between the cables.

1) Factors influencing the leakage current to the earth and the solutions:

There are distributed capacitance between the lead cables and the earth. The larger the distributed capacitance is, the larger the leakage current will be. The distributed capacitance can be reduced by

effectively reducing the distance between the inverter and the motor. The higher the carrier frequency is, the larger the leakage current will be. The leakage current can be reduced by reducing the carrier frequency. However, reducing the carrier frequency may result in addition of motor noise. Note that additional installation of reactor is also an effective method to remove the leakage current.

The leakage current may increase following the addition of circuit current. Therefore, when the motor power is high, the corresponding leakage current will be high too.

2) Factors of producing leakage current between the cables and solutions:

There is distributed capacitance between the output cables of the inverter. If the current passing the lines has higher harmonic, it may cause resonance and thus result in leakage current. If thermal relay is used, it may generate error action.

The solution is to reduce the carrier frequency or install output reactor. It is recommended that thermal relay not be installed before the motor when using the inverter, and that electronic over current protection function of the inverter be used instead.

7.3.6 Precautions for Installing EMC input filter at the input end of power supply

1) When using the inverter, please follow its rated values strictly. Since the filter belongs to Classification I electric appliances, the metal enclosure of the filter should be large and the metal ground of the installing cabinet should be well earthed and have good conduction continuity. Otherwise there may be danger of electric shock and the EMC effect may be greatly affected.

2) Through the EMC test, it is found that the filter ground must be connected with the PE end of the inverter at the same public earth. Otherwise the EMC effect may be greatly affected.

3) The filter should be installed at a place close to the input end of the power supply as much as possible.

Chapter 8 Trouble Shooting

8.1 Fault and Trouble Shooting

Fault Name	Converter short circuit protection
Fault Code	E-01
Reason	1. Short-circuit or ground fault occurred at inverter output side 2. The cable connecting the motor with the inverter is too long 3. The module is over-heat 4. The cable connections inside the inverter are loosen 5. The main board is abnormal 6. The power board is abnormal 7. The IGBT module is abnormal
Solution	1. Inspect whether motor damaged, insulation worn or cable damaged 2. Install a reactor or output filter 3. Check if the air duct is blocked and if the fan is in normal status, and resolve the existing problems 4. Make sure the cables are connected well 5. Ask for technical support 6. Ask for technical support 7. Ask for technical support

Fault Name	Over current when acceleration
Fault Code	E-02
Reason	1. Short-circuit or ground fault occurred at inverter output side 2. Control mode is vector control & motor parameters are not identified 3. The acceleration time is too short 4. The manual torque boost or V/F curve is not proper 5. The voltage is too low 6. Start the running motor 7. Load is added suddenly during the acceleration 8. Capacity of inverter is too small
Solution	1. Inspect whether motor damaged, insulation worn or cable damaged 2. Identify the motor parameters 3. Increase the acceleration time 4. Adjust the manual torque boost or V/F curve 5. Make the voltage in the normal range 6. Select speed tracking start or start the motor till it stops 7. Cancel the sudden added load 8. Select bigger capacity inverter

Fault Name	Over-current when deceleration
Fault Code	E-03
Reason	1. Short-circuit or ground fault occurred at inverter output side 2. Control mode is vector control & motor parameters are not identified 3. The deceleration time is too short 4. The voltage is too low 5. Load is added suddenly during the deceleration 6. Have not installed braking unit and braking resistor
Solution	1. Inspect whether motor damaged, insulation worn or cable damaged 2. Identify the motor parameters 3. Increase the deceleration time 4. Make the voltage in the normal range 5. Cancel the sudden added load 6. Install braking unit and braking resistor

Fault Name	Over-current when constant speed running
Fault Code	E-04
Reason	1. Short-circuit or ground fault occurred at inverter output 2. Control mode is vector control & motor parameters are not identified 3. The voltage is too low 4. Load is added suddenly during running 5. Capacity of inverter is too small
Solution	1. Inspect whether motor damaged, insulation worn or cable damaged 2. Identify the motor parameters 3. Make the voltage in the normal range 4. Cancel the sudden added load 5. Select bigger capacity inverter

Fault Name	Over-voltage when acceleration
Fault Code	E-05
Reason	1. The input voltage is too high 2. There is external force driving the motor to run during acceleration 3. The acceleration time is too short 4. Have not installed braking unit and braking resistor
Solution	1. Make the voltage in the normal range 2. Cancel the external force 3. Increase the acceleration time 4. Install braking unit and braking resistor

Fault Name	Over-voltage when deceleration
Fault Code	E-06
Reason	1. The input voltage is too high 2. There is external force driving the motor to run during deceleration 3. The deceleration time is too short 4. Have not installed braking unit and braking resistor
Solution	1. Make the voltage in the normal range 2. Cancel the external force 3. Increase the deceleration time 4. Install braking unit and braking resistor

Fault Name	Over-voltage when constant speed running
Fault Code	E-07
Reason	1. The input voltage is too high 2. There is external force driving the motor to run during the inverter running
Solution	1. Make the voltage in the normal range 2. Cancel the external force or install braking resistor

Fault Name	Power-supply fault
Fault Code	E-08
Reason	1. The input voltage is out of range
Solution	1. Make the voltage in the normal range

Fault Name	Under-voltage fault
Fault Code	E-09
Reason	1. Instantaneous power-off 2. The input voltage is out of range 3. Bus voltage is abnormal 4. The rectifier bridge and buffer resistor are abnormal 5. The power board is abnormal 6. The control board is abnormal
Solution	1. Fault Reset 2. Make the voltage in the normal range 3. Ask for technical support 4. Ask for technical support 5. Ask for technical support 6. Ask for technical support

Fault Name	Inverter over load
Fault Code	E-10
Reason	1. The load is too heavy or motor blockage occurs 2. Capacity of inverter is too small
Solution	1. Reduce the load, check the status of motor & machinery 2. Select bigger capacity inverter

Fault Name	Motor over load
Fault Code	E-11
Reason	1. P9-01 is set improperly 2. The load is too heavy or motor blockage occurs 3. Capacity of inverter is too small
Solution	1. Set P9-01 properly 2. Reduce the load, check the status of motor & machinery 3. Select bigger capacity inverter

Fault Name	Input phase failure
Fault Code	E-12
Reason	1. The input three phase power supply is abnormal 2. The power board is abnormal 3. The control board is abnormal 4. The thunder prevention board is abnormal
Solution	1. Check the power supply, and make it in normal 2. Ask for technical support 3. Ask for technical support 4. Ask for technical support

Fault Name	Output phase failure
Fault Code	E-13
Reason	1. The connection between inverter and motor is abnormal 2. Output voltage unbalance during the motor running 3. The power board is abnormal 4. The IGBT module is abnormal
Solution	1. Inspect whether motor damaged, insulation worn or cable damaged 2. Make sure the motor three phase winding is normal 3. Ask for technical support 4. Ask for technical support

Fault Name	IGBT module over-heat
Fault Code	E-14
Reason	1. Ambient temperature is too high 2. Air duct is blocked 3. Cooling fans are broken 4. Thermal resistor(temperature sensor) of the module is broken 5. IGBT module is broken
Solution	1. Reduce the ambient temperature 2. Clear the air duct 3. Replace cooling fans 4. Replace the thermal resistor 5. Replace IGBT module

Fault Name	Peripheral device fault
Fault Code	E-15
Reason	1. DI terminal receives an external fault signal generated by peripheral device
Solution	1. Reset running

Fault Name	Communication fault
Fault Code	E-16
Reason	1. Master computer works abnormal 2. Communication cable is abnormal 3. PD group is set improperly
Solution	1. Check the connection of master computer 2. Check the communication connection 3. Set PD group properly

Fault Name	Current detection fault
Fault Code	E-18
Reason	1. Hall device is abnormal 2. The power board is abnormal
Solution	1. Check hall device and connection 2. Replace the power board

Fault Name	Auto tuning fault
Fault Code	E-19
Reason	1. Motor parameters are set improperly 2. Parameter identification process is delayed
Solution	1. Set parameters according to the motor nameplate 2. Check the cables connecting inverter with motor

Fault Name	EEPROM read/write fault
Fault Code	E-21
Reason	1. EEPROM chip is broken
Solution	1. Replace the main board

Fault Name	Inverter hardware fault
Fault Code	E-22
Reason	1. Over voltage 2. Over current
Solution	1. Handle as over voltage fault 2. Handle as over current fault

Fault Name	Short-circuit to ground fault
Fault Code	E-23
Reason	1. The motor is short-circuit to ground
Solution	1. Replace cables or motor

Fault Name	Ask for technical support
Fault Code	E-26
Reason	1. Ask for technical support
Solution	1. Ask for technical support

Fault Name	Customized fault 1
Fault Code	E-27
Reason	1. DI terminal receives signal of customized fault 1
Solution	1. Reset running

Fault Name	Customized fault 2
Fault Code	E-28
Reason	1. DI terminal receives signal of customized fault 2
Solution	1. Reset running

Fault Name	Accumulated power-on time arrival fault
Fault Code	E-29
Reason	1. The accumulated power-on time reaches the setting value
Solution	1. Ask for technical support

Fault Name	Off-load fault
Fault Code	E-30
Reason	1. The inverter running current is smaller than P9-64
Solution	1. Confirm if the load breaks away and P9-64 & P6-65 are set properly

Fault Name	PID feedback lost fault when running
Fault Code	E-31
Reason	1. PID feedback is smaller than PA-26
Solution	1. Check PID feedback signal or set PA-26 properly

Fault Name	Current-limiting fault
Fault Code	E-40
Reason	1. Whether the load is heavy or the motor is blocked 2. Capacity of inverter is too small.
Solution	1. Reduce the load and detect the motor & machinery condition 2. Select bigger capacity inverter

8.2 Common Faults and Solutions

No.	Fault	Reason	Solution
1	No display when power-on	The input voltage is 0 or too low. The switching power supply on the power board is broken. Rectifier bridge is broken. Buffer resistors are broken. The control board or keypad is broken.	Check the input power-supply. Reconnect the keypad and 40-core flat cable.
2	E-23 is displayed when power-on	The motor or the output line is short circuited to the ground. The inverter is damaged.	Measure the insulation of the motor and output line with magneto-ohmmeter.
3	E-14 is displayed frequently	Carrier frequency is too high. Fans are broken or air duct is broken. The inverter inside components are broken (such as thermistor).	Reduce the carrier frequency (P0-15). Replace fans, clear the air duct.
4	Motor does not run after the inverter runs	Motor and motor cables are abnormal. The inverter parameters are set improperly (motor parameter). The connection of the cables of the power board and control board are not good. The power board is broken.	Make sure the connection of the inverter and motor is very well. Replace the motor or clear the mechanical failure. Check & reset the motor parameters.
5	Digital terminal is invalid	The parameter is set improperly. The external signal is wrong. The jumper between PLC and +24V is loose. The control board is broken.	Check & reset P4 group parameters. Reconnect the external signal cable. Reconnect the jumper between PLC and +24V.
6	Over voltage and over current fault are displayed frequently	Motor parameters are set improperly. The ACC/DEC time is improper. The load fluctuates.	Reset motor parameters or perform auto tuning. Set proper ACC/DEC time.
7	Power on display 8.8.8.8.8	Inverter initialization failure. The relative components of the control board are broken.	Check the keypad and 40-core flat cable. Replace the control board.

Chapter 9 MODBUS Communication Protocol

Inverter provides RS485 communication interface, and adopts MODBUS communication protocol. User can realize centralized monitoring through PC/PLC, host computer, and also can set inverter's operating commands, modify or read function parameters, read operating status and fault information, etc.

9.1 About Protocol

This serial communication protocol defines the transmission information and use format in the series communication. It includes the formats of master-polling, broadcast and slave response frame, and master coding method with the content including slave address (or broadcast address), command, transmiting data and error checking. The response of slave adopts the same structure, including action confirmation, returning the data and error checking etc. If slave takes place the error while it is receiving the information or cannot finish the action demanded by master, it will send one fault signal to master as a response.

9.2 Application Method

The inverter could be connected into a "Single-master Multi-slave" PC/PLC control network with RS485 bus.

9.3 Bus Structure

(1) Interface mode
RS485

(2) Transmission mode
There provide asynchronous series and half-duplex transmission mode. At the same time, just one can send the data and the other only receives the data between master and slave. In the series asynchronous communication, the data is sent out frame by frame in the form of message.

(3) Topological structure
In Single-master Multi-slave system, the setup range of slave address is 0 to 247. 0 refers to broadcast communication address. The address of slave must be exclusive in the network. That is basic condition of MODBUS communication.

9.4 Protocol Description

Inverter communication protocol is a kind of asynchronous serial master-slave communication protocol. In the network, only one equipment (master) can build a protocol (Named as "Inquiry/Command"). Other equipments (slave) response "Inquiry/Command" of master only by providing the data, or doing the action according to the master's "Inquiry/Command". Here, master is Personnel Computer, Industrial control equipments or Programmable logical controller, and the slave is inverter or other communication equipments with the same communication protocol. Master not only can visit some slave separately for communication, but also sends the broadcast information to all the slaves. For the single "Inquiry/Command" of master, all of slaves will return a signal that is a response; for the broadcast information provided by master, slave needs not feedback a response to master.

9.5 Communication Data Structure

MODBUS protocol communication data format of inverter is shown as following:

In RTU mode, the Modbus minimum idle time between frames should be no less than 3.5 bytes. The checksum adopts CRC-16 method. All data except checksum itself sent will be counted into the calculation. Please refer to section: CRC Check for more information. Note that at least 3.5 bytes of Modbus idle time should be kept and the start and end idle time need not be summed up to it.

The entire message frame must be transmitted as a continuous data stream. If a idle time is more than 1.5 bytes before completion of the frame, the receiving device flushes the incomplete message and assumes that the next byte will be the address field of a new message. Similarly, if a new message begins earlier than 3.5 bytes interval following a previous message, the receiving device will consider it as a continuation of the previous message. Because of the frame's confusion, at last the CRC value is incorrect and communication fault will occur.

RTU frame format:

START	Transmission time of 3.5 bytes
Slave Address	Communication addr. : 0 to 247
Command Code	03H: Read slave parameters 06H: Write slave parameters
DATA (N-1)	Data: Function code parameter address, the number of function code parameter, Function code parameter, etc.
DATA (N-2)	
……	
DATA0	
CRC Low byte	Detection Value: CRC value
CRC High byte	
END	Transmission time of 3.5 bytes

9.6 Command Code and Communication Data Description

9.6.1 Command code: 03H, reads N words. (There are 12 characters can be read at the most.)

For example: The inverter start address F002 of the slave 01 continuously reads two consecutive values.

Master command information

Address	01H
Command Code	03H
Start Address High byte	F0H
Start Address Low byte	02H
Register Number High byte	00H
Register Number Low byte	02H
CRC Low byte	56H
CRC High byte	CBH

Slave responding information

Address	01H
Command Code	03H
Byte Number	04H
Data F002H High byte	00H
Data F002H Low byte	00H
Data F003H High byte	00H
Data F003H Low byte	01H
CRC Low byte	3BH
CRC High byte	F3H

9.6.2 Command code: 06H, write a word

For example: Write 5000(1388H) into address F00AH, slave address 02H.

Master command information

Address	02H
Command Code	06H
Data Address High byte	F0H
Data Address Low byte	0AH
Data Content High byte	13H
Data Content Low byte	88H
CRC Low byte	97H
CRC High byte	ADH

Slave responding information

Address	02H
Command Code	06H
Data Address High byte	F0H
Data Address Low byte	0AH
Data Content High byte	13H
Data Content Low byte	88H
CRC Low byte	97H
CRC High byte	ADH

9.6.3 CRC checking

In RTU mode, messages include an error-checking field that is based on a CRC method. The CRC field checks the contents of the entire message. The CRC field is two bytes, containing a 16-bit binary value. The CRC value is calculated by the transmitting device, which appends the CRC to the message. The receiving device recalculates a CRC during receipt of the message, and compares the calculated value to the actual value received in the CRC field. If the two values are not equal, an error results.

The CRC is started by 0xFFFF. Then a process begins of applying successive eight-bit bytes of the message to the current contents of the register. Only the eight bits of data in each character are used for generating the CRC. Start and stop bits, and the parity bit, do not apply to the CRC.

During generation of the CRC, each eight-bit character is exclusive ORed with the register contents. Then the result is shifted in the direction of the least significant bit (LSB), with a zero filled into the most significant bit (MSB) position. The LSB is extracted and examined. If the LSB was a 1, the register is then exclusive ORed with a preset, fixed value. If the LSB was a 0, no exclusive OR takes place. This process is repeated until eight shifts have been performed. After the last (eighth) shift, the next eight-bit byte is exclusive ORed with the register's current value, and the process repeats for eight more shifts as described above. The final contents of the register, after all the bytes of the message have been applied, is the CRC value.

When the CRC is appended to the message, the low byte is appended first, followed by the high byte. The following are C language source code for CRC-16.

```
unsigned int crc_cal_value(unsigned char *data_value,unsigned char data_length)
{
    int i;
    unsigned int crc_value = 0xffff;
    while(data_length--)
    {
        crc_value ^= *data_value++;
        for(i=0;i<8;i++)
        {
            if(crc_value&0x0001)
                crc_value = (crc_value>>1)^0xa001;
            else
                crc_value = crc_value>>1;
        }
    }
    return(crc_value);
}
```

9.6.4 Address definition of communication parameter

Here is about address definition of communication parameter. It’s used to control the inverter operation, status and related parameter setting.

(1) The mark rules of function code parameters address:

The group number and mark of function code is the parameter address for indicating the rules.
P0~PF group parameter address:
High byte: F0 to FF, low byte: 00 to FF
A0 group parameter address:
High byte: A0, low byte: 00 to FF
U0 group parameter address:
High byte: 70H, low byte: 00 to FF
For example: P3-12, address indicates to F30C
PC-05, address indicates to FC05
A0-01, address indicates to A001
U0-03, address indicates to 7003

Note:

1. Group PF: Either the parameter cannot be read, nor be changed.
2. Group U0: Only for reading parameter, cannot be changed parameters.
3. Some parameters cannot be changed during operation; some parameters regardless of what kind of status the inverter in, the parameters cannot be changed. Change the function code parameters, pay attention to the scope of the parameters, units, and relative instructions.

Besides, due to EEPROM be frequently stored, it will reduce the lifetime of EEPROM. So in the communication mode, some function code needn't be stored, only change the RAM value. To achieve this function, change high order P of the function code into zero.

Corresponding function code addresses are indicated below:
P0~PF group parameter address:
High byte: 00 to FF, low byte: 00 to FF
A0 group parameter address:
High byte: 40, low byte: 00 to FF
U0 group parameter address:
High byte: 70H, low byte: 00 to FF
For example: P3-12, address indicates to 030C
PC-05, address indicates to 0C05
A0-01, address indicates to 4001
These addresses can only act writing RAM, it cannot act reading. When act reading, it is invalid address.

(2) Stop/start parameter address

Parameter Address	Parameter Description
1000	* Communication setting value (-10000 to 10000) (Decimal)
1001	Running frequency
1002	Bus voltage
1003	Output voltage
1004	Output current
1005	Output power
1006	Output torque
1007	Running speed
1008	DI input flag
1009	DO output status
100A	AI1 voltage
100B	AI2 voltage
100C	Radiator temperature
100D	Counting value input
100E	Length value input
100F	Load speed

Parameter Address	Parameter Description
1010	PID setting
1011	PID feedback
1012	PLC running process
1013	HDI input pulse frequency, unit is 0.01kHz
1014	Feedback speed, unit is 0.1Hz
1015	Remain running time
1016	AI1 voltage before calibration
1017	AI2 voltage before calibration
1018	Reserved
1019	Linear speed
101A	Current power on time
101B	Current running time
101C	HDI input pulse frequency, unit is 1Hz
101D	Communication setting value
101E	Actual feedback speed
101F	Main frequency A display
1020	Auxiliary frequency B display

Note:

Communication setting value is the percentage of relative value, and 10,000 corresponds to 100.00%, -10000 corresponds to -100.00%.

To the data of frequency, the percentage is the percentage of relative maximum frequency (P0-10).

To the data of torque, the percentage is P2-10 (torque upper limit).

(3) Control command input to inverter (write only)

Command Word Address	Command Function
2000	0001：Forward running
	0002：Reverse running
	0003：Forward jog
	0004：Reverse jog
	0005：Coast to stop
	0006：Deceleration to stop
	0007：Fault reset

(4) Read inverter status: (read only)

Status Word Address	Status Word Function
3000	0001：Forward running
	0002：Reverse running
	0003：Stop

(5) Parameters locking password check: (If the return is 8888H, it means the password check passes.)

Password Address	Content of Input password
1F00	*****

(6) Digital output terminal control: (write only)

Command Address	Command Content
2001	BIT0：Reserved BIT1：Reserved BIT2：RELAY1 RELAY1 output control BIT3：RELAY2 RELAY2 output control BIT4：HDO Open Collector output control

(7) Analog output AO1 control: (write only)

Command Address	Command Content
2002	0～7FFF refers to 0%～100%

(8) Analog output AO2 control: (write only)

Command Address	Command Content
2003	0～7FFF refers to 0%～100%

(9) Pulse output control: (write only)

Command Address	Command Content
2004	0～7FFF refers to 0%～100%

(10) This function is required when it is necessary to initialize the parameters of the inverter through the host computer.

If PP-00 (user password) is not 0, the password verification is first required through the communication. After the verification is passed, within 30s, the host computer initializes the parameters.

The communication address for the user password verification is 1F00H, and the correct user password is directly written into the address, and then the password verification can be completed.

The address for initializing the parameters of the communication is 1F01H, and the data content is defined as follows:

Parameter Initialization Address	Command Function
	1：Restore factory default

	2：Record information clearly
	3：Restore user backup parameters
	501：Back up user current parameters

(11) Inverter fault code description:

Inverter Fault Address	Inverter Fault Information
8000	0000：No fault 0001：Reserved 0002：Over current when acceleration 0003：Over current when deceleration 0004：Over current when constant speed running 0005：Over voltage when acceleration 0006：Over voltage when deceleration 0007：Over voltage when constant speed running 0008：Reserved 0009：Under voltage fault 000A：Inverter overload 000B：Motor overload 000C：Input phase failure 000D：Output phase failure 000E：Module overheat 000F：External fault 0010：Communication fault 0011：Contactor fault 0012：Current detection fault 0013：Motor autotuning fault 0014：Reserved 0015：Parameter R/W fault 0016：Inverter hardware fault 0017：Motor short circuit to ground fault 0018：Reserved 0019：Reserved 001A：Running time arrival 001B：Customized fault 1 001C：Customized fault 2 001D：Power on time arrival 001E：Off load 001F：PID feedback lost when running 0028：Fast current limiting over time fault 0029：Reserved 002A：Speed deviation oversize 002B：Motor over speed

9.6.5 Description data of communication fault information (fault code)

Communication Fault Address	Fault function description

8001	0000：No fault 0001：Password error 0002：Command error 0003：CRC check error 0004：Invalid address 0005：Invalid parameter 0006：Parameter changing invalid 0007：System locked 0008：EEPROM operating

9.7 PD Group Communication Parameter Description

Pd-00	Baud Rate	Factory Setting	6005
	Setting range	0：300BPS 1：600BPS 2：1200BPS 3：2400BPS 4：4800BPS 5：9600BPS 6：19200BPS 7：38400BPS	

This parameter is used to set the data transmission rate between host computer and the inverter. Please note that baud rate of the host computer and inverter must be the same. Otherwise, the communication is impossible. The bigger baud rate is, the faster communication is.

Pd-01	Data Format	Factory Setting	0
	Setting range	0：No check: Data format <8,N,2> 1：Even parity Check :data format <8,E,1> 2：Odd Parity Check : data format <8,O,1> 3：No check: Data format <8-N-1>	

The setting data format of host computer and inverter must be the same; otherwise, the communication is impossible.

Pd-02	Local Address	Factory Setting	1
	Setting range	0~247, 0 is broadcast address	

When the local address is set to be 0, that is broadcast address, it can realize the broadcast function of host computer.

Local address must be unique (except broadcast address). This is the base of point-to-point communication between host computer and inverter.

Pd-03	Response Delay	Factory Setting	2ms
	Setting range	0~20ms	

Response delay: It refers to the interval time from the inverter finishes receiving data to sending data to the

host computer. If the response delay is less than system processing time, then the response delay is based on the system processing time. If the response delay is more than system processing time, after the system processing the data, it should be delayed to wait until the response delay time arrives, then sending data to host computer.

Pd-04	Communication Timeout	Factory Setting	0.0s
	Setting range	0.0s (invalid) 0.1~60.0s	

When the function code set to be 0.0 s, the communication timeout parameter is invalid.
When the function code set to be valid value, if the interval time between the communication and the next communication is beyond the communication timeout, the system will report communication failure error (Err16). At normal circumstances, it is set to be invalid. If in the continuous communication system, set the parameter, you can monitor the communication status.

Pd-05	Communication Protocol Selection	Factory Setting	1
	Setting range	0：Nonstandard Modbus protocol 1：Standard Modbus protocol	

PD-05=1: Select standard MODBUS protocol
PD-05=0: When reading the command, the slave return is one byte than the standard MODBUS protocol's, for details refer to communications Data Structure of this protocol.

Pd-06	Communication Selection	Factory Setting	0
	Setting range	Units place: Current resolution 0: 0.01A 1: 0.1A Tens place Writing selection 0: Reply 1: No reply	

The units place is used to confirm the output current unit when the communication reads the output current.

The tens place is used in the applications where setting MODBUS is not required to write a reply.